Mobrey Product eCatalogue

2015 Edition

POINT LEVEL

ULTRASONIC

HYDROSTATIC

ELECTRO MECHANICAL

mobrey

EMERSON™
Process Management

2015 Mobrey Catalogue

Dear Valued Customer,

We are pleased to introduce our 2015 Mobrey Product Catalog. Mobrey process instrumentation has been providing industry with reliable measurement and control of liquids, gases and dry ingredients for over 100 years. Built on many years' applications experience in all sectors of the processing industry, from water and power to marine, petrochemicals, food and pharmaceuticals, the Mobrey brand is tried and trusted the world over.

Our mission is to provide customers with solutions that improve safety, enhance product quality, increase efficiency, and help achieve increased regulatory compliance.

A feature of this catalogue is the introduction of our standard and expanded product offering in selected product data sheets. The standard offering, represented by the starred options (*) in the product ordering tables, represents the most common models and options. These standard options should be selected for best delivery. The expanded offering is subject to additional delivery lead times. We continue to strive and build products to your specifications and are committed to meeting your delivery requirements, even in an emergency situation.

You will also notice the Quick Reader Code in this catalog. You can use your Smartphone and any Quick Reader application to scan this image. You will be taken directly to the www.mobrey.com/documentation website where you can get the latest and most up to date product information.

At Emerson, quality continues to be our top priority. Mobrey products are manufactured or assembled in ISO 9001 certified facilities in locations around the globe. We continually test our instrument solutions so you can be confident that they will meet and even exceed published specifications.

Yours sincerely

Chris Rooke
Managing Director
Rosemount Measurement Ltd.

Table of Contents

Introduction

Level Introduction . . . . . page 4
Level product selection guide . . . . . page 5

Point level detection

Vibrating fork liquid level switches . . . . . page 6
Ultrasonic gap sensor Liquid level switches . . . . . page 8
Electro-mechanical float and displacer level switches . . . . . page 10
Dry products level switches . . . . . page 12
Product data sheets index (Point level detection) . . . . . page 14
Product Data Sheet: Squing 2 . . . . . page 15
Product Data Sheet: Mini-Squing . . . . . page 31
Product Data Sheet: Squitch 2 . . . . . page 39
Product Data Sheet: 003 . . . . . page 45
Product Data Sheet:
Mobrey Ultrasonic Liquid level Detection Systems for Interface Applications . . . . . page 51
Product Data Sheet: Horizontal Magnetic Level Float Switches . . . . . page 61
Product Data Sheet: M-Switch . . . . . page 89
Product Data Sheet: Vertical Magnetic Level Float Switches . . . . . page 95
Product Data Sheet: Dry Solids Level Switches . . . . . page 115

Continuous measurement

Ultrasonic continuous level transmitters and control units . . . . . page 126
Ultrasonic sludge blanket monitoring and control . . . . . page 128
Displacer continuous level measurement. . . . . page 130
Hydrostatic continuous level transmitter . . . . . page 131
Product data sheets index (Continuous level) . . . . . page 132
Product Data Sheet: MSP422/MSP400RH/MSP900GH . . . . . page 133
Product Data Sheet: MSP900SH/MSP900FH . . . . . page 145
Product Data Sheet: MCU900 Series . . . . . page 157
Product Data Sheet: MSM400 . . . . . page 167
Product Data Sheet: MLT100 . . . . . page 175
Product Data Sheet: Mobrey 9700 Series . . . . . page 185

Specialized conductivity

Conductivity water and steam interface monitoring . . . . . page 198
Product Data Sheet: Hydrastep 2468 and Hydratect 2462 . . . . . page 200

A worldwide network of sales and services

Rosemount Measurement Contacts . . . . . page 213
Europe . . . . . **page 213**
North America . . . . . **page 215**
Canada . . . . . **page 215**
Latin America . . . . . **page 215**
Middle East / Africa . . . . . **page 215**
Asia Pacific . . . . . **page 216**

Level Introduction

Point level detection

Vibrating fork liquid level switches

It is good practice, and often mandatory, to fit high and low alarm level switches to vessels in addition to level transmitters. Mobrey vibrating fork level switches are high integrity devices used in overfill prevention or vessel empty detection applications, and are virtually unaffected by process conditions in the vessel.

Ultrasonic gap sensor liquid level switches

Ultrasonic liquid point level switches (sensors) are used in non-hazardous industrial processes to detect high or low liquid levels and liquid interface.

Float and displacer liquid level switches

Mobrey electromechanical float and displacer level switches are rugged and robust with proven long term reliability in the harshest of environments. They are ideal for alarm and pump control duties, especially in critical applications or hazardous areas.

Dry products level switches

The measurement and control of dry products is important in all industries, from mining through to fine chemicals. Mobrey products offer a range of technologies to ensure selection of the most appropriate instrument.

Emerson's reliable Mobrey level instrumentation can help you optimize all your level applications

Continuous measurement

Ultrasonic continuous level transmitters and control units

Ultrasonic level transmitters provide non-contacting measurement of level, contents, and open channel flow by measuring the distance to the level surface. Ultrasonic transmitters are generally specified for simple level duties.

Ultrasonic sludge blanket monitoring and control

Emerson offers electronic systems for a wide variety of applications in water and effluent processes, sludges, slurries and suspended solids.

Displacer continuous level measurement

The Mobrey MLT100 level transmitter is one of the most advanced displacer based devices on the market, coupling the time proven buoyancy principle with state of the art electronics in an instrument of high reliability and stability.

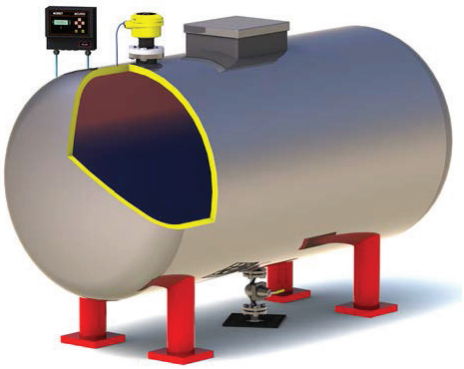

Hydrostatic continuous level transmitter

Mobrey hydrostatic electronic level transmitters provide the measurement solution where in-tank problems such as foaming, vapor layers, and temperature gradients prohibit the use of other instrumentation.

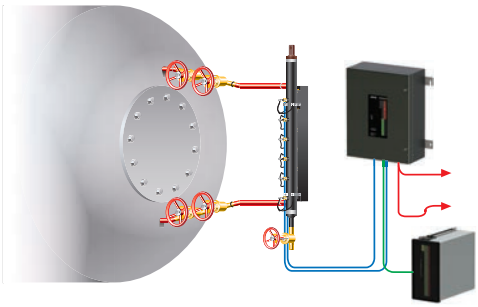

Specialised conductivity

Conductivity water and steam interface monitoring

Mobrey steam/water interface level gauges use specialized, high performance conductivity probes in external columns and manifolds, ideal for steam plants where reliable and redundant indication of boiler water level is critical.

Contents

Level product selection guide

With all the technologies, products and parameters to consider, selecting the best technology for level measurement can be challenging. This selection guide is designed to help you choose the right product for your level application. Here you will be guided to the most appropriate technology and the subsequent pages provide further detail on each one.

Application considerations

		Vibrating Fork	Ultrasonic Gap Sensor	Float / Displacer	Ultrasonic Continuous	Conductivity	Hydrostatic	Vibrating Rod / Paddle Switch
Measurement	Level (liquid)	●	●	●	●	●	●	○
	Level (dry solids)	○	○	○	○	○	○	●
	Contents (Volume)	○	○	○	●	○	●	○
	Open Channel Flow	○	○	○	●	○	○	○
	Interface (liquid/liquid)	○	●	●	○	○	○	○
	Interface (steam/water)	○	○	○	○	●	○	○
	Suspended solids (%solids)	○	●	○	○	○	○	○
Process medium characteristics	Changing density	●	●	◐	●	●	○	●
	Changing dielectric [1]	●	●	●	●	●	●	○
	Wide pH variations	●	●	●	●	●	●	○
	Pressure and temperature changes	●	◐	●	◐	●	◐	○
	Condensing vapours	●	◐	●	◐	●	●	○
	Bubbling / boiling surfaces	●	◐	◐	◐	●	●	○
	Foam	◐	○	●	○	●	●	○
	Liquid with dielectric < 1.5	●	●	●	●	●	●	○
	Coating liquids	◐	●	◐	●	●	◐	○
	Viscous liquids	◐	●	◐	●	●	●	○
	Cyrstalising liquids	◐	●	◐	●	●	◐	○
	Solids, granules, powders	○	○	○	○	○	○	●
	Sludges and slurries	◐	●	◐	●	●	◐	○
Vessel environment conditions	Top down connection	●	○	●	●	●	●	●
	Bottom or side connections direct to vessel	●	●	●	○	●	●	●
	Stilling wells or chamber applications	○	○	●	◐	●	◐	○
	Device will be close to tank wall/disturbing object	●	●	●	◐	●	●	●
	High turbulence	●	●	○	○	●	●	○
	Long and narrow mounting nozzles	●	○	◐	○	●	●	○
	Angled or slanted surface	●	●	○	◐	●	●	●
	High empty and fill rates	●	●	●	●	●	●	●
	Internal obstructions	●	●	●	◐	●	●	●
	Agitation [2]	●	●	◐	◐	●	●	●
	Non-metallic vessel	●	●	●	●	●	●	●
	Nozzle in centre of tank	●	●	●	○	●	○	●
	Valves or isolation required	◐	●	◐	○	●	●	○
	Small tank < 40 in. (1 m)	●	●	●	●	●	◐	●

TABLE KEY: ● Good ◐ Application Dependent ○ Not Recommended

[1] *Changing dielectric has no impact on level applications. It will have some impact on interface detection.*

[2] *Position the instrument where it will not have contact with agitator vanes.*

Contents

Vibrating fork liquid level switches

- Dry-to-wet and wet-to-dry level detection and control for the process industries
- Short fork design for minimal tank intrusion or pipe mounting
- Rapid wet-to-dry time for highly responsive switching
- Drip-off fork design
- Fast and low cost installation
- Low maintenance, no moving parts, or crevices

There are two different models of Mobrey vibrating forks. For guidance in choosing the correct model for your application, please see the table opposite.

Mobrey Mini-Squing

- Compact and lightweight design for side or top mounting
- Choice of Direct Load or PNP/PLC electronics switching outputs
- Threaded and hygienic process connections
- Stainless steel housing and plug/socket connection for the fast fit, high volume, OEM user

Mobrey Squing 2

- Choice of switching outputs includes Relay, Namur, Direct Load, or PNP/PLC electronics
- Flanged, threaded, hygienic, and extended length options
- Can be wirelessly enabled using the Rosemount 702 discrete input transmitter

Picture: Squing 2 (threaded versions) and Mini-Squing (threaded and hygienic versions) Vibrating Fork Level Switches

Product Selection
Contents

Specification and selection guide for vibrating forks

Click on the product name to turn to the page with the product data sheet

		Mini-SQUING	SQUING 2
Certification	Explosion-proof certification	○	●
	Intrinsically safe/hazardous area	○	●
	Non-hazardous (safe) area / ordinary location	●	●
	Safety system suitable	○	●
Outputs	Direct load switching	●	●
	PNP solid state	●	●
	DPDT[1] relay output	○	●
	NAMUR	○	●
	Wireless[2]	○	●
Housing	Glass-filled nylon (plastic)	○	●
	Metal (aluminium/stainless steel)	●	●
Wetted material	316L Stainless steel	●	●
	ECTFE/PFA copolymer, coated 316L Stainless steel	○	●
	Corrosion-resistant nickel alloy C-276	○	●
Process temperature	–40 to 302 °F (–40 to 150 °C)	●	●
Process pressure	1450 psig at 122 °F (100 barg at 50 °C)	●	●
Process connections	Threaded	●	●
	Hygienic	●	●
	Flanged	○	●
Extended lengths available		○	●

TABLE KEY: Available ● Not available ○

1 *DPDT: Double pole double throw switching.*

2 *Wireless when used in conjuction with a Rosemount 702 Wireless discrete transmitter.*

Product Selection
Contents

Ultrasonic gap sensor Liquid level switches

A Mobrey ultrasonic liquid level control system contains:

- A tank-mounted Squitch-2/003/402SD/433SD or pipe-mounted 442SD ultrasonic level switch
- A Mobrey MCU200 Series industrial control unit to monitor the level switch state and provide the required switching function

There are five different models of Mobrey gap sensors. For guidance in choosing the correct model for your application, please see the table opposite.

Mobrey Squitch 2

- A compact, self-contained, ultrasonic gap sensor, designed for switching in clean liquids
- Choice of direct load or solid-state switching outputs
- Mounting options including threads and hygienic couplings
- LED status indicator visible through cover lens
- Extended length options

Mobrey 003

- Corrosion resistant PPS construction
- Choice of relay or solid-state switching outputs
- 1-in. or ¾-in. threaded process connections

Mobrey 402SD/433SD/442SD

- Stainless steel construction
- Interface detection
- Tank or pipe section mounted options
- Requires a Mobrey MCU200 Series controller

Mobrey MCU200 Series Controller

- Wall-mounting IP65 polycarbonate enclosure
- 115/230 Vac (MCU201) or 24 Vdc (MCU203)
- Simple adjustable set-point relay output relay for wet-to-dry or dry-to-wet changeover indication, and fault/alarm condition indication
- Three LED status indicators – Normal, Alarm, and Fault
- Selectable time delay
- Continuous cable check between sensor and unit

Picture: Squitch-2 (threaded version), 003, 402SD, 433SD, and 442SD Ultrasonic Gap Sensor Level Switches, and MCU Series Controller

Specification and selection guide for ultrasonic gap sensors

Click on the product name to turn to the page with the product data sheet

		SQUITCH 2	003	402SD	433SD	442SD
Applications	Point level detection in most liquids	○	○	●	●	●
	Point level detection in clean liquids	●	●	○	○	○
Certification	Non-hazardous (safe) area / ordinary location	●	●	●	●	●
Outputs	Direct load switching	●	●	●	●	●
	2 x Open drain FET	○	○	●	●	●
	SPCO [1] relay output	○	○ [2]	○ [2]	● [2]	● [2]
Housing / body	Glass-filled nylon (plastic)	●	○	○	○	○
	Cast stainless steel	○	○	●	●	●
	Polyphenylene sulphide	○	●	○	○	○
Wetted material	Cast stainless steel	●	○	●	●	●
	Polyphenylene sulphide	○	●	○	○	○
Process temperature	–40 to 257 °F (–40 to 125 °C)	●	○	●	○	●
	–40 to 221 °F (–40 to 105 °C)	●	●	●	●	●
	–94 to 302 °F (–70 to 150 °C)	○	○	●	○	●
	–94 to 122 °F (–70 to 50 °C)	○	○	●	●	●
Process pressure	72.5 psi (5 bar)	●	●	●	●	●
	290 psi (20 bar)	●	○	●	●	●
	1523 psi (105 bar)	○	○	●	●	●
Process connections	Threaded	●	●	●	●	●
	Hygienic	○	●	○	○	○
Extended lengths available		○	○	○	○	○

[1] *SPCO: Single pole change over switching.*

[2] *SPCO relay output is via the Mobrey MCU200 Series controller.*

TABLE KEY: Available ● Not available ○

Product Selection

Contents

Electro-mechanical float and displacer level switches

- Robust and reliable switching in most liquids
- Unique 3 magnet switching system – no springs means reduced maintenance
- Operates in extremes of pressure and temperature
- Vertical and horizontal mount switches for in-tank or external chamber mounting
- Wide range of process connections, floats and switching outputs available
- Comprehensive range of chambers to suit existing process connections (*see data sheet*)
- Wide range of materials of construction available
- Float switches can be wireless-enabled using the Rosemount 702 discrete input transmitter
- A floating roof tank alarm switch model is available for use on floating roof tanks to signal if the roof rises too high (see data sheet IP107/FR in the documentation area of the Mobrey brand pages at www.emersonprocess.com)

For guidance in choosing the correct model, horizontal or vertical, for your application, see the table on the next page.

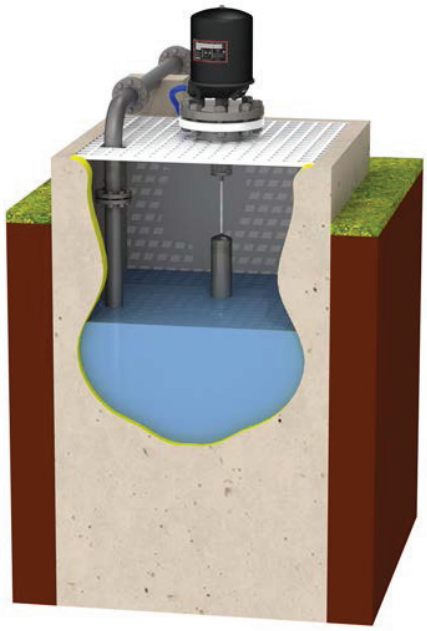

Pictures:
1. Example of a Vertical Displacer-type Level Switch application – (top).
2. M-Switch SMA1 (cast SST housing), Magnetic Horizontal Float-type Level Switches S36DAF84 (yellow), and S01DBF84 – (bottom, left)
3. Cutaway showing a Vertical Float-type Level Switch (with one switching mechanism) mounted in a Mobrey Chamber – (bottom, right)

Specification and selection guide for electro-mechanical float and displacer level switches

Click on the product name to turn to the page with the product data sheet

		M-Switch	Magnetic Level Switch	Verticals
Certification	Explosion-proof	●	●	●
	Intrinsically safe circuit suitability	● [1]	●	●
	General purpose	●	●	●
	Marine	●	●	●
	Safety system suitable	○	●	○
Output / switch type	General purpose	●	●	●
	Low powered circuits	●	●	●
	High power circuits	○	●	●
	Hermetically sealed	○	●	●
	Pneumatic	○	●	○
	Wireless [2]	●	●	●
Housing	Aluminium	○	●	●
	Aluminium bronze	○	●	○
	Gunmetal	○	●	○
	Cast iron	○	○	●
	Drawn steel	○	○	●
	Stainless steel	●	●	●
Wetted material	Stainless steel	●	●	●
	Exotic materials	○	●	●
Process temperature	Maximum 266 °F (130 °C)	●	●	●
	Minimum 32 °F (0 °C)	●	●	●
	Maximum 752 °F (400 °C) [3]	○	●	●
	Minimum –148 °F (–100 °C) [3]	○	●	●
Process pressure	Maximum 275 psig at 68 °F (19 barg at 20 °C)	●	●	●
	Maximum 1479 psig at 68 °F (102 barg at 20 °C)	○	●	●
	Maximum 2900 psig at 68 °F (200 barg at 20 °C)	○	●	○ [4]
Process connections	Threaded	●	○	●
	Flanged	●	●	●
	Chamber	○	●	●

TABLE KEY: Available ● Not available ○

[1] *Rosemount Measurement can provide a statement of compliance to confirm the M-Switch can be used in an Intriniscally Safe application.*

[2] *Wireless when used in conjuction with a Rosemount 702 Wireless discrete transmitter.*

[3] *Dependent on the option and material selected – refer to the product data sheet.*

[4] *Special option only – contact Rosemount Measurement sales for further information.*

Product Selection
Contents

Dry products level switches

Mobrey products offer a range of technologies to ensure that users are able to select the most appropriate instrument for the application.

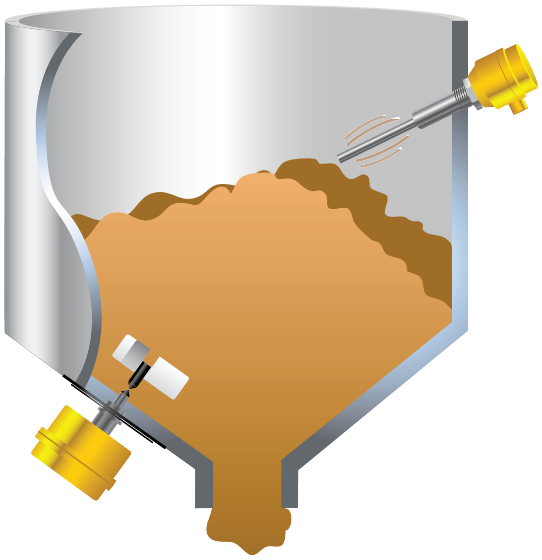

Mobrey PLS Series paddle switches

Traditional switch used to detect high or low levels of most free flowing bulk solids and powders. The paddle rotates freely in the absence of material but is impeded when material is present, operating a microswitch output.

Mobrey VLS Series vibrating rod switches

Single probe design of vibrating level switch for free flowing materials which eliminates the problems of clogging and bridging of fork designs.

For guidance in choosing the correct model for your application, please see the table on the next page.

Pictures: Paddle switch (left), vibrating rod switch (bottom, right), and an application with both switches (top, right)

Product selection guide

Click on any model name to turn to the page with the product data sheet

		Paddle (PLSK model)	Paddle (PLSH model)	Vibrating rod (VLSK model)	Vibrating rod (VLSH model)
Duty	High level alarm	●	●	●	●
	Low level alarm	●	●	◪	◪
	Level measurement	○	○	○	○
Process medium	Powder	●	●	●	●
	Granular	●	●	●	●
	Pellets	●	●	●	●
	Aggregate	●	●	○	○
Density (of process medium)	Very low	●	●	◪	◪
	Low	●	●	●	●
	Medium	●	●	●	●
	High	●	●	●	●
	Very high	●	●	○	○
Moisture (of process medium)	Low	●	●	●	●
	High	○	○	○	○
Material coating	Minimal	●	●	●	●
	Heavy build-up	○	○	○	○
Corrosive	Low	●	●	●	●
	High	○	○	●	●
Installation	Vertical (top)	●	●	●	●
	Horizontal (side)	●	●	●	●
	Non-contact (top)	○	○	○	○
Temperature	Ambient	●	○	●	●
	Low (to -20 °C)	●	○	●	●
	High (to +110 °C)	○	●	●	○
Pressure	Atmospheric	●	●	●	●
	Low 2 bar	●	●	●	●
	Medium 10 bar	○	○	●	●
Atmosphere	Dusty	●	●	●	●
	Steamy	○	○	◪	◪
Vibration	Low	●	●	●	●
	High	●	●	○	○

TABLE KEY: ● Good ◪ Application Dependent ○ Not Recommended

[1] *Very low (up to 100 kg/m³): e.g. powdered (80), bread crumbs (96), and polyethylene flakes (95).*

[2] *Low (100 to 250 kg/m³): e.g. soap flakes (160), ground cork (160), charcoal (208), sawdust (210).*

[3] *Medium (250 to 1000 kg/m³): e.g. bran (256), rolled oat (304), powdered milk (450), flour (596), grain (600 to 800), and granulated sugar (849).*

[4] *High (1000 to 2000 kg/m³): e.g. soot (1025), coal (1100), fine salt (1201), cement (1506), and dry sand (1602).*

[5] *Very high (over 2000 kg/m³): e.g. gravels and aggregates (2000 to 2500), earth (2000), and slag (2100).*

Product data sheets index (*Point level detection*)

Vibrating fork liquid level switches

Product Data Sheet: Squing 2 . . . . . page 15

Product Data Sheet: Mini-Squing . . . . . page 31

Ultrasonic gap sensor Liquid level switches

Product Data Sheet: Squitch 2 . . . . . page 45

Product Data Sheet: 003 . . . . . page 45

Product Data Sheet:
Mobrey Ultrasonic Liquid level Detection Systems for Interface Applications . . . . . page 51

Electro-mechanical float and displacer level switches

Product Data Sheet: Horizontal Magnetic Level Float Switches . . . . . page 61

Product Data Sheet: Horizontal Mini-Switch . . . . . page 89

Product Data Sheet: Vertical Magnetic Level Float Switches . . . . . page 95

Dry products level switches

Product Data Sheet: Dry Solids Level Switches . . . . . page 115

Product Data Sheet
November 2012
IP2024

Mobrey Squing 2

Vibrating Fork Liquid Level Switch

- Function virtually unaffected by flow, bubbles, turbulence, foam, vibration, solids content, coating products, liquid properties, and product variations
- No need for calibration and requires a minimum amount of installation
- Easy terminal access, polarity insensitive, and short circuit protection
- Electronic self-checking and condition monitoring
- Adjustable switching delay for turbulent or splashing applications
- Magnetic test point makes functional test easy
- "Fast Drip" Fork Design gives quicker response
- Explosion-proof/Flameproof and Intrinsically Safe options

mobrey

EMERSON™
Process Management

Overview of the Mobrey Squing 2

Adjustable Mode and Switching Delay

'Fast Drip' Forks

Measurement principle

The Mobrey Squing 2 is designed using the principle of a tuning fork. A piezo-electric crystal oscillates the forks at their natural frequency. Changes to this frequency are continuously monitored. The frequency of the vibrating fork sensor changes depending on the medium in which it is immersed. The denser the liquid, the lower the frequency.

When used as a low level alarm, the liquid in the tank or pipe drains down past the fork, causing a change of natural frequency that is detected by the electronics and switches the output state.

When the Squing 2 is used as a high level alarm, the liquid rises in the tank or pipe, making contact with the fork which then causes the output state to switch.

Key features and benefits

- Virtually unaffected by turbulence, foam, vibration, solids content, coating liquids, or liquid properties
- The Squing 2 is designed for operation in process temperatures from –40 to 302 °F (–40 to 150 °C)
- A 'heartbeat' LED indicates its operating state. The LED also flashes when the switch output is 'off' and is constantly lit when 'on'
- Adjustable switching delay prevents false switching in turbulent or splashing applications
- 'Fast Drip' fork design gives quicker response time, especially with viscous liquids
- Rapid wet-to-dry and dry-to-wet time setting for highly responsive switching
- Fork shape is optimized for hand polishing to meet hygienic requirements
- No moving parts or crevices for virtually no maintenance

Contents

Overview of the Mobrey Squing 2 . . . . . page 16
Mobrey Squing 2 level switch ordering . . . . . page 18
Specifications . . . . . page 21
Product certifications . . . . . page 24
Dimensional drawings . . . . . page 26

Fit and forget

- Once installed, the Squing 2 is ready to go.
  It needs no calibration and requires minimum installation
- The 'heartbeat' LED gives an instant visual indication that the unit is operational
- Functional testing of the instrument and system is easy with a magnetic test point
- You can install, and forget it

Superior performance

- The Squing 2 is a popular choice for high and low level alarm and pump control duties for its simplicity, ease of use, and reliability
- Functionality is virtually unaffected by flow, turbulence, bubbles, foam, or vibration
- The 'Fast Drip' design allows the liquid to be quickly drawn away from the fork tip when mounted horizontally, making the Squing 2 quicker and more responsive in high density or viscous liquid applications
- With a user-selectable time delay feature, the risk of false switching is minimized in turbulent or splashing applications

Applications

- Overfill protection
- High and low level alarms
- Pump control or limit detection
- Run dry or pump protection
- Hygienic applications
- High temperature applications
- Wireless applications

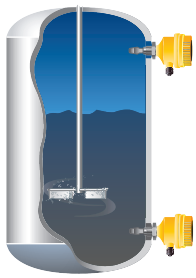

High And Low Level Alarm

High Temperature Applications

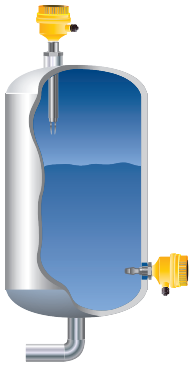

Pump Control / Limit Detection

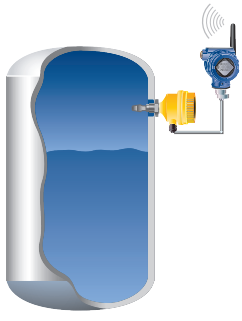

Wireless Applications using a
Rosemount 702 Wireless Discrete Transmitter

Mobrey Squing 2 level switch ordering

Table 1. Squing 2 ordering information

★The Standard offering represents the most common models and options. These options should be selected for best delivery.
The Expanded offering is manufactured after receipt of order and is subject to additional delivery lead time.

Model	Product Description	
T	Tuning fork level switch	
Materials of Construction (Process Connection and Fork)		
Standard		**Standard**
D	316/316L stainless steel (1.4401/1.4404)	★
E	316/316L stainless steel (1.4401/1.4404) 3.1B certs (1.4404)	★
Expanded		
C(1)	Alloy C (UNS N10002), Alloy C-276 (UNS N10276), solid	
F(2)	ECTFE/PFA copolymer, coated 316/316L SST (1.4401/1.4404)	
G(2)	ECTFE/PFA copolymer, coated 316/316L SST (1.4401/1.4404) 3.1B certs (1.4404)	
Process Connection		
Standard		**Standard**
5A	3/4-in. BSPT (R) thread	★
5B	3/4-in. BSPP (G) thread	★
5D	3/4-in. NPT thread	★
1A	1-in. BSPT (R) thread	★
1B	1-in. BSPP (G) thread	★
1D	1-in. NPT thread	★
1P	1-in. BSPP (G) O-ring hygienic fitting	★
6R	1 1/2-in. (38 mm) Tri-clamp hygienic fitting	★
2R	2-in. (51 mm) Tri-clamp hygienic fitting	★
8Q	Mobrey 'A' Flange	★
9Q	Mobrey 'G' Flange	★
1G	1-in. ASME B16.5 Class 150 Raised Face (RF) flange	★
1H	1-in. ASME B16.5 Class 300 Raised Face (RF) flange	★
6G	1 1/2-in. ASME B16.5 Class 150 Raised Face (RF) flange	★
6H	1 1/2-in. ASME B16.5 Class 300 Raised Face (RF) flange	★
2G	2-in. ASME B16.5 Class 150 Raised Face (RF) flange	★
2H	2-in. ASME B16.5 Class 300 Raised Face (RF) flange	★
3G	3-in. ASME B16.5 Class 150 Raised Face (RF) flange	★
3H	3-in. ASME B16.5 Class 300 Raised Face (RF) flange	★
4G	4-in. ASME B16.5 Class 150 Raised Face (RF) flange	★
4H	4-in. ASME B16.5 Class 300 Raised Face (RF) flange	★
1K	DN25, EN1092 PN 10/16 flange	★
1L	DN25, EN1092 PN 25/40 flange	★
1M	DN25, EN1092 PN 63 flange	★
1N	DN25, EN1092 PN 100 flange	★
6K	DN40, EN1092 PN 10/16 flange	★
6L	DN40, EN1092 PN 25/40 flange	★
2K	DN50, EN1092 PN 10/16 flange	★
2L	DN50, EN1092 PN 25/40 flange	★
7K	DN65, EN1092 PN 10/16 flange	★
7L	DN65, EN1092 PN 25/40 flange	★
3K	DN80, EN1092 PN 10/16 flange	★
3L	DN80, EN1092 PN 25/40 flange	★
4K	DN100, EN1092 PN 10/16 flange	★
4L	DN100, EN1092 PN 25/40 flange	★
SA	25A, 10K, JIS B2220 flange	★

Table 1. Squing 2 ordering information

★The Standard offering represents the most common models and options. These options should be selected for best delivery.
The Expanded offering is manufactured after receipt of order and is subject to additional delivery lead time.

SB	25A, 20K, JIS B2220 flange			★
TA	40A, 10K, JIS B2220 flange			★
TB	40A, 20K, JIS B2220 flange			★
UA	50A, 10K, JIS B2220 flange			★
UB	50A, 20K, JIS B2220 flange			★
VA	80A, 10K, JIS B2220 flange			★
VB	80A, 20K, JIS B2220 flange			★
XA	100A, 10K, JIS B2220 flange			★
XB	100A, 20K, JIS B2220 flange			★
Expanded				
1J	1-in. ASME B16.5 Class 600 Raised Face (RF) flange			
6J	$1^1/_2$-in. ASME B16.5 Class 600 Raised Face (RF) flange			
2J	2-in. ASME B16.5 Class 600 Raised Face (RF) flange			
3J	3-in. ASME B16.5 Class 600 Raised Face (RF) flange			
4J	4-in. ASME B16.5 Class 600 Raised Face (RF) flange			
6M	DN40, EN1092 PN 63 flange			
6N	DN40, EN1092 PN 100 flange			
2M	DN50, EN1092 PN 63 flange			
2N	DN50, EN1092 PN 100 flange			
7M	DN65, EN1092 PN 63 flange			
7N	DN65, EN1092 PN 100 flange			
3M	DN80, EN1092 PN 63 flange			
3N	DN80, EN1092 PN 100 flange			
4M	DN100, EN1092 PN 63 flange			
4N	DN100, EN1092 PN 100 flange			
Electronic Type			**Available Certifications**	
Standard				**Standard**
T	Direct load switching (mains 2-wire) 20 to 264 Vac 50/60 Hz, 20 to 60 Vdc		N, G, E, F, D, J	★
G	PNP/PLC low voltage (3-wire) 20 to 60 Vdc		N, G, E, F, D, J	★
V	Relay (DPCO)		N, G, E, F, D, J	★
K	NAMUR		All	★
H	8/16 mA		All	★
Surface Finish			**Available Connections**	
Standard				**Standard**
1	Standard surface finish		All	★
2	Hand polished (Ra < 0.4 µm)		Hygienic Connection Only	★
Product Certifications		**Electronic Types Allowed**	**Available Housings**	
Standard				**Standard**
N	Standard (no approvals)	All	All	★
G	FM and CSA (unclassified, safe area)	All	Y, T	★
E	ATEX Exd	All	X, S	★
F	FM Exd	All	Y, T	★
D	CSA Exd	All	Y, T	★
J	IECEx Exd	All	X, S	★
A	ATEX I.S.	K, H	All	★
K	FM I.S. and Non-incendive	K, H	All	★
C	CSA I.S. and Non-incendive	K, H	All	★
H	IECEx I.S.	K, H	All	★

Table 1. Squing 2 ordering information

★The Standard offering represents the most common models and options. These options should be selected for best delivery.
The Expanded offering is manufactured after receipt of order and is subject to additional delivery lead time.

Housing		Available for Certifications	
Standard			**Standard**
A	Glass Filled Nylon, M20 conduits/cable threads	N, A, K, C, H	★
D	Glass Filled Nylon, 1/2-in. NPT conduits/cable threads	N, A, K, C, H	★
X	Aluminum Alloy, M20 conduits/cable threads	All except G, F, D	★
Y	Aluminum Alloy, 3/4-in. NPT conduits/cable threads	All except A, H	★
S	Stainless Steel, M20 conduits/cable threads	All except G, F, D	★
T	Stainless Steel 3/4-in. NPT conduits/cable threads	All except A, H	★
Fork Length		**Available Connection**	
Standard			**Standard**
A	Standard length 1.7 in. (44 mm)	All except flanged models	★
H(3)	Standard length flange 4.0 in. (102 mm)	All flanged models	★
B	Ext. 5.9 in. (150 mm)	All except 1-in. BSPP O-ring 1P	★
C	Ext. 11.8 in. (300 mm)	All except 1-in. BSPP O-ring 1P	★
D	Ext. 19.7 in. (500 mm)	All except 1-in. BSPP O-ring 1P	★
L	Semi-Ext 3.9 in. (98 mm)	All except 1-in. BSPP O-ring 1P	★
M(4)	Extended, customer specified length in millimeters	All except 1-in. BSPP O-ring 1P	★
Extension Range			
Standard			**Standard**
XXXX(4)	Specific customer specified length in millimeters (Only if fork length M is specified)		★
Typical Model Number: T D 1A V 1 N A A			

(1) Available for threaded process connection codes 0A, 0D, 1A, and 1D and flanged process connections as standard, other upon request.

(2) Available only for a flanged Squing 2 but excludes 1-in./DN25/25A flanges.

(3) Not available for hand polished wet side.

(4) Minimum extended length available for 3/4-in. threaded connection is 3.8 in. (95 mm); for 1-in. threaded, it is 3.7 in. (94 mm); for flanged, it is 3.5 in. (89 mm); and for Tri-clamp, it is 4.1 in. (105 mm). Maximum length is 157.5 in. (4000 mm), except for ECTFE/PFA copolymer coating and hand-polished process where the maximum length is 59.1 in. (1500 mm) and 39.4 in. (1000 mm) respectively. Example: Code M4000 is 4000 millimeters.

Spare parts and accessories

Table 2. Spare parts and accessories

★The Standard offering represents the most common models and options. These options should be selected for best delivery.
The Expanded offering is manufactured after receipt of order and is subject to additional delivery lead time.

Spares and Accessories (1) (2)		
Standard		**Standard**
02100-1000-0001	Seal for 1-in. BSPP (G1A). Material: Non-asbestos BS7531 grade X carbon fiber with rubber binder	★
02100-1010-0001	Hygienic adaptor boss 1-in. BSPP. Material: 316 SST fitting. FPM/FKM O-ring	★
02100-1020-0001	2-in. (51 mm) Tri-clamp kit (vessel fitting, clamp ring, and seal). Material: 316 SST, NBR Nitrile	★
02100-1030-0001	Telescopic test magnet	★
02120-2000-0001(3)	1 1/2-in. BSPP adjustable 316 SST clamp gland for 1-in. extended lengths. Silicone (Si) rubber seal	★
02120-2000-0002(3)	1 1/2-in. NPT adjustable 316 SST clamp gland for 1-in. extended lengths. Silicone (Si) rubber seal	★
02120-7000-0001	Replacement Cassette: Direct load switching (2 Wire) (Red)	★
02120-7000-0002	Replacement Cassette: PNP/PLC low voltage cassette (Yellow)	★
02120-7000-0003	Replacement Cassette: NAMUR (Light Blue)	★
02120-7000-0004	Replacement Cassette: Relay (DPCO) cassette (Green)	★
02120-7000-0005	Replacement Cassette: 8/16 mA output cassette (Dark Blue)	★

(1) Check the Electronic Type and Product Certification sections in Table 1 on page 18 for availability conditions.

(2) Intrinsically Safe (IS) approved cassettes can only be replaced with the same type of IS cassette. Non-IS cassette types can be interchanged with other non-IS cassettes, but the new label must be fitted and the original part number transferred to the new label.

(3) The adjustable clamp gland is not explosion-proof.

Specifications

Material selection

Emerson provides a variety of Mobrey products with various product options and configurations including materials of construction that can be expected to perform well in a wide range of applications. The Mobrey product information presented is intended as a guide for the purchaser to make an appropriate selection for the application. It is the purchaser's sole responsibility to make a careful analysis of all process parameters (such as all chemical components, temperature, pressure, flow rate, abrasives, contaminants, etc.), when specifying product, materials, options and components for the particular application. Emerson Process Management is not in a position to evaluate or guarantee the compatibility of the process fluid or other process parameters with the product, options, configuration or materials of construction selected.

General

Product

- Mobrey Squing 2 Vibrating Fork Liquid Level Switch

Measuring principle

- Vibrating Fork

Applications

- Most liquids including coating liquids, aerated liquids, and slurries

Mechanical

Housing / Enclosure

Table 3. Housing / Enclosure specification

Housing Code	A	D	X	Y	S	T
Housing Material	Nylon PA66 30%GF		Al alloy ASTM B85 A360.0		316C12 SST	
Rotational	Yes		No		No	
Housing Paint	Not Applicable		Polyurethane Paint		Not Applicable	
LED Window	Nylon PA12		None		None	
Conduit Entry	M20	1/2-in. NPT	M20	3/4-in. NPT	M20	3/4-in. NPT
Ingress Protection	IP66/67 to EN60529		IP66/67 to EN60529, NEMA 4X		IP66/67 to EN60529, NEMA 4X	

Extended lengths

- The maximum extended length is 157.5 in. (4000 mm) except for ECTFE/PFA copolymer coating and hand-polished process connection options which have a maximum length of 59.1 in. (1500 mm) and 39.4 in. (1000 mm) respectively

Connections

- Threaded, hygienic, and flanged process connections. See "Process Connection" on page 18 for a complete list

Table 4. Minimum extended lengths

Process Connection	Minimum Extended Length
3/4–in. Threaded	3.8 in. (95 mm)
1–in. Threaded	3.7 in. (94 mm)
Flanged	3.5 in. (89 mm)
Tri-clamp	4.1 in. (105 mm)

Process connection materials

- 316/316L Stainless Steel (1.4401/1.4404 dual certified)
- Alloy C (UNS N10002) and Alloy C-276 (UNS N10276) *– available for flanged, and BSPT and NPT threaded process connections (3/4-in. and 1-in. BSPT (R), and 3/4-in. and 1-in. NPT)*
- ECTFE/PFA co-polymer coated 316/316L Stainless Steel (1.4401/1.4404 dual certified) – *only available for a flanged Squing 2 but excludes 1-in./DN25/25A flanges*
- Hand-polished to better than 0.4 µm option for hygienic connections
- Gasket material for 3/4-in. and 1-in. BSPP (G) is non-asbestos BS7531 Grade X carbon fiber with rubber binder

Dimensional drawings

- See "Dimensional drawings" on page 26

Performance

Hysteresis (water)

- ±0.039-in. (±1 mm) nominal

Switching point (water)

- 0.5 in. (13 mm) from tip (vertical) / from edge (horizontal) of fork (this will vary with different liquid densities)

Functional

Maximum operating pressure

- The final rating depends on the selected process connection
- Threaded connection: see Figure 1 for operating pressures
  Note: Clamp glands 02120-2000-0001 and 02120-2000-0002 (page 20) limit the maximum pressure to 18.85 psig (1,3 bar g)
- Hygienic connection: 435 psig (30 bar g)
- Flanged connection: See Figure 1 or Table 5 on page 22 (*whichever gives the lowest pressure*)

Figure 1. Process pressure

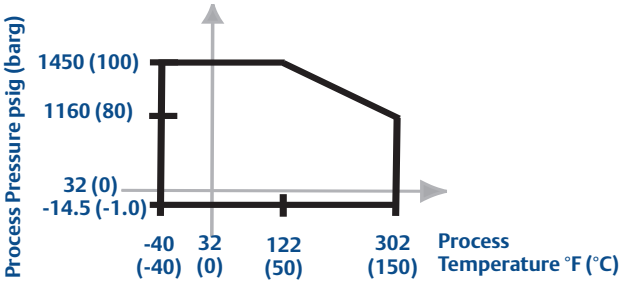

Table 5. Maximum flange pressure rating

Standard	Class/Rating	SST Flanges
ASME B16.5	Class 150	275 psig(1)
ASME B16.5	Class 300	720 psig(1)
ASME B16.5	Class 600	1440 psig(1)
EN1092-1	PN 10	10 barg(2)
EN1092-1	PN 16	16 barg(2)
EN1092-1	PN 25	25 barg(2)
EN1092-1	PN 40	40 barg(2)
EN1092-1	PN 63	63 barg(2)
EN1092-1	PN 100	100 barg(2)
JIS B2220	10K	14 barg(3)
JIS B2220	29K	34 barg(3)

(1) At 100 °F (38 °C), the rating decreases with an increasing process temperature.

(2) At 122 °F (50 °C), the rating decreases with an increasing process temperature.

(3) At 248 °F (120 °C), the rating decreases with an increasing process temperature.

Minimum and maximum operating temperatures

- See Figure 2 for operating temperatures
- Clamp glands 02120-2000-0001 and 02120-2000-0002 (page 20) limit the maximum temperature to 257 °F (125 °C)
- The ambient temperature for a 8/16 mA cassette is limited to 158 °F (70 °C) in dust applications

Figure 2. Operating temperatures

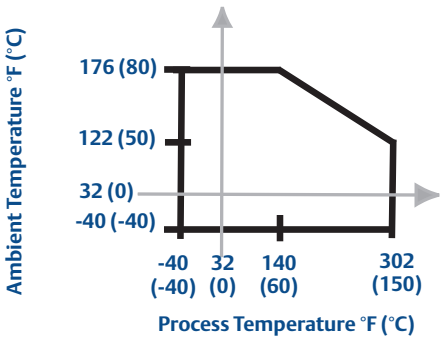

Liquid density requirement

- Minimum 37.5 lb/ft^3 (600 kg/m^3)

Liquid viscosity range

- 0.2 to 10000 cP (centiPose)

Solids content and coating

- Maximum recommended diameter of solid particles in the liquid is 0.2 in. (5 mm)
- For a coating product, avoid bridging of forks

Switching delay

- User selectable 0.3, 1, 3, 10, 30 seconds delay for dry-to-wet and wet-to-dry switching

CIP (Clean In Place) and SIP (Steam In Place) cleaning

- Withstands cleaning routines up to 275 °F (135 °C)

Electrical

Switching mode

User selectable switching mode (Dry=on or Wet=on)

Protection

- Polarity insensitive – *Direct Load and Relay electronics*
- Over-current protection – *Direct Load and PNP/PLC electronics*
- Short-circuit protection – *Direct Load and PNP/PLC electronics*
- Load-missing protection – *Direct Load and PNP/PLC electronics*
- Surge protection (to IEC61326) – *Direct Load and PNP/PLC electronics*

Heartbeat LED

- The Squing 2 has a status-indicating heartbeat LED, which can be seen at all times and from all angles through a lens in the cover (no lens in metal housings)
- The LED flashes when the output is 'off' and is constantly lit when it is 'on'. The LED gives a constant indication that the Squing 2 is functioning correctly (different flash rates are used to indicate a product malfunction) and gives a local indication of the process state

Magnetic test point

- A magnetic test point is located on the side of the housing, allowing a functional test of the Squing 2 and a system connected to it. By holding a magnet to the target, the Squing 2 output changes state for as long as the magnet is held there

Terminal connection (wire diameter)

- Minimum 26 AWG, Maximum 14 AWG (0.13 to 2.5 mm^2). Note national regulations.

Conduit plugs/cable gland

- Metal housing:
  Conduit entries for explosion-proof areas are shipped with one Exd plug (loose in bag) and two dust caps fitted. Use suitably rated cable glands. Unused conduit entries must be sealed with a suitably rated blanking plug
- Glass-filled nylon housing with direct load, PNP/PLC and IS electronics are shipped with one PA66(1) cable gland and one blanking plug
- Glass-filled nylon housing with relay electronics are shipped with two PA66(1) cable glands

Grounding

- The Squing 2 must always be grounded either through the terminals or using the external ground connection provided.

(1) Cable diameter 0.2 to 0.3 in. (5 to 8 mm)

Electrical connections

■ Direct load switching (two-wire) cassette

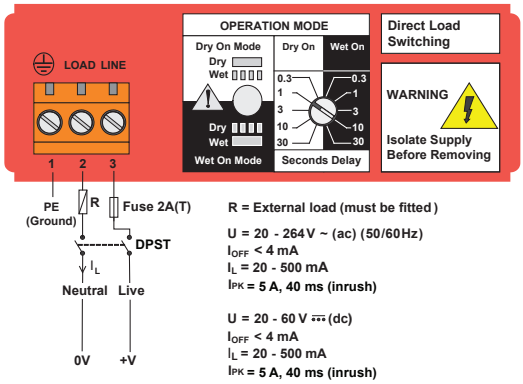

■ NAMUR (light blue) cassette

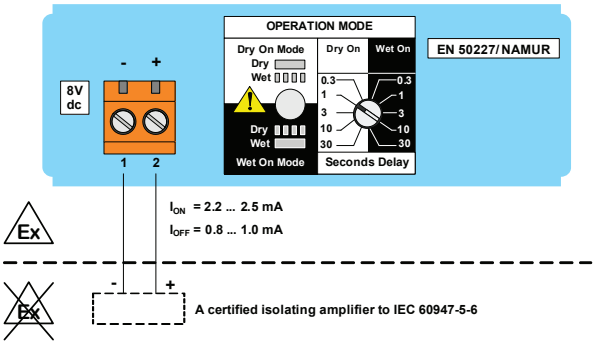

■ DPCO dual relay for voltage free contacts cassette

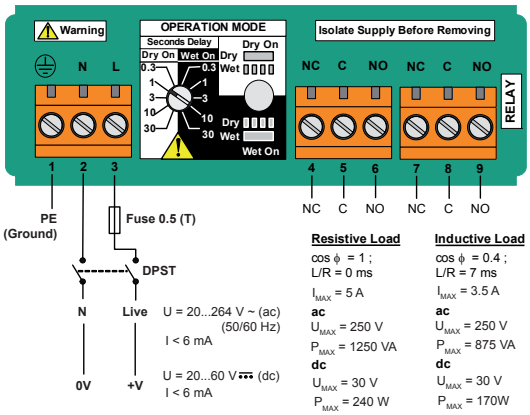

■ 8/16 mA (dark blue) cassette

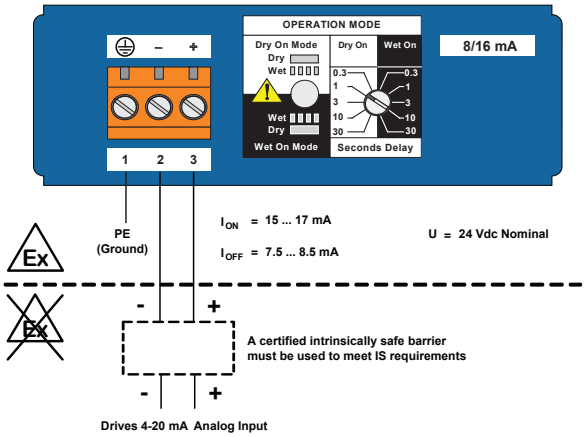

■ Solid state PNP output for direct interface to PLC's (three wires) cassette

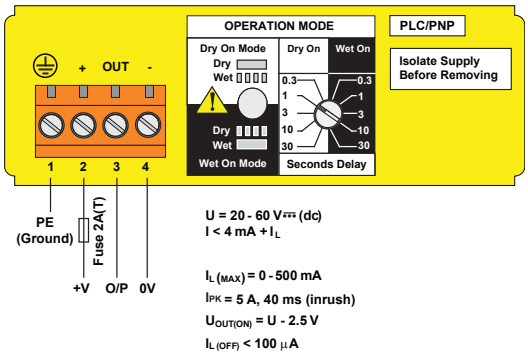

Product certifications

European directive information

The EC declaration of conformity for all applicable European directives for this product can be found in the Safety Instructions manual supplied with the Squing 2. A hard copy may be obtained by contacting your local sales office.

ATEX Directive (94/9/EC)

Complies with the ATEX Directive.

Pressure Equipment Directive (PED) (97/23/EC)

The Mobrey Squing 2 is outside the scope of PED Directive.

L.V. Directive

EN61010-1 Pollution degree 2, Category II (264 V maximum), Pollution degree 2, Category III (150 V maximum)

Electro Magnetic Compatibility (EMC) Directive

EN61326 Emissions to Class B.
Immunity to industrial location requirements.

CE-mark

Complies with applicable directives (EMC, ATEX, and LVD)

Ordinary location certification for FM

G The switch has been examined and tested to determine that the design meets basic electrical, mechanical, and fire protection requirements by FM, a nationally recognized testing laboratory (NRTL) as accredited by the Federal Occupational Safety and Health Administration (OSHA).

Ordinary location certification for CSA

G The switch has been examined and tested to determine that the design meets basic electrical, mechanical, and fire protection requirements by CSA, a nationally recognized testing laboratory as accredited by the Standards Council of Canada (SCC).

Single seal

Canadian Registration Number

CRN 0F04227.2C

NOTE
The requirements of CRN are met when a Mobrey Squing 2 CSA IS-approved (C code) vibrating fork level switch model is configured with 316/316L stainless steel (1.4401/1.4404) wetted parts and either NPT threaded or 2-in. to 8-in. ASME B16.5 flanged process connections.

Hazardous locations certifications

North american approvals

Factory Mutual (FM) explosion-proof approval

F Explosion-proof for Class I, Div. 1, Groups A, B, C, and D
Temperature Class: T6 (T_{amb} –40 to 75 °C)
Enclosure: Type 4X

Factory Mutual (FM) intrinsically safe and non-incendive approval

K Intrinsically Safe for Class I, Div. 1, Groups A, B, C, and D
Class I, Zone 0, AEx ia IIC
Non-Incendive for Class I, Div. 2, Groups A, B, C, and D
Class I, Zone 2, IIC
Temperature Code: T5 (T_{amb} –40 to 80 °C, Tproc < 80 °C)
Control Drawing: 71097/1013 (*with NAMUR electronics*)
Control Drawing: 71097/1316 (*with 8/16 mA electronics*)

NOTE
A certified isolating amplifier or barrier must be used for intrinsic safety.

Canadian approvals

Canadian Standards Association (CSA) explosion-proof

D Explosion-proof for Class I, Div. 1, Groups A, B, C, and D
Temperature Class: T6 (T_{amb} –40 to 75 °C)
Enclosure: Type 4X
Single seal

Canadian Standards Association (CSA) intrinsically safe and non-incendive

C Intrinsically Safe for Class I, Div. 1, Groups A, B, C, and D
Class 1, Zone 0, Ex ia IIC
Non-Incendive for Class I, Div. 2, Groups A, B, C, and D
Temperature Code: T5 (T_{amb} –40 to 80 °C, Tproc < 80 °C)
Control Drawing: 71097/1177 (*with NAMUR electronics*)
Control Drawing: 71097/1317 (*with 8/16 mA electronics*)
Single seal

NOTE
A certified isolating amplifier or barrier must be used for intrinsic safety.

European approvals

ATEX flameproof approval

E Certificate: Sira 01ATEX1163X
Flameproof and Dust:
ATEX Marking ⟨Ex⟩ II 1/2 G D
Ex d IIC T6...T2 Ga/Gb
Ex tb IIIC T85 °C...T265 °C Db

ATEX intrinsically safe approval

A Certificate: Sira 01ATEX2121X
Intrinsic Safety and Dust:
ATEX Marking ⟨Ex⟩ II 1 G D
Ex ia IIC T5...T2 Ga
Ex ia IIIC T85 °C...T265 °C Da

NOTE
A certified isolating amplifier or barrier must be used for intrinsic safety.

International approvals

International Electrotechnical Commission (IEC) flameproof approval

J Certificate: IECEx SIR 06.0050X
Flameproof and Dust:
Ex d IIC T6...T2 Ga/Gb
Ex tb IIIC T85°C...T265°C Db

International Electrotechnical Commission (IEC) intrinsically safe approval

H Certificate: IECEx SIR 06.0065X
Intrinsically Safe and Dust:
Ex ia IIC T5...T2 Ga
Ex ia IIIC T85 °C...T265 °C Da

NOTE
A certified isolating amplifier or barrier must be used for intrinsic safety.

Dimensional drawings

Threaded mounting (standard length) . . . . . page 26
Thread mounting (extended length) . . . . . page 27
Flange mounting (standard length) . . . . . page 28
Flange mounting (extended length) . . . . . page 29

Threaded mounting (standard length)

Note: Dimensions are in inches (millimeters)

GLASS-FILLED NYLON HOUSING

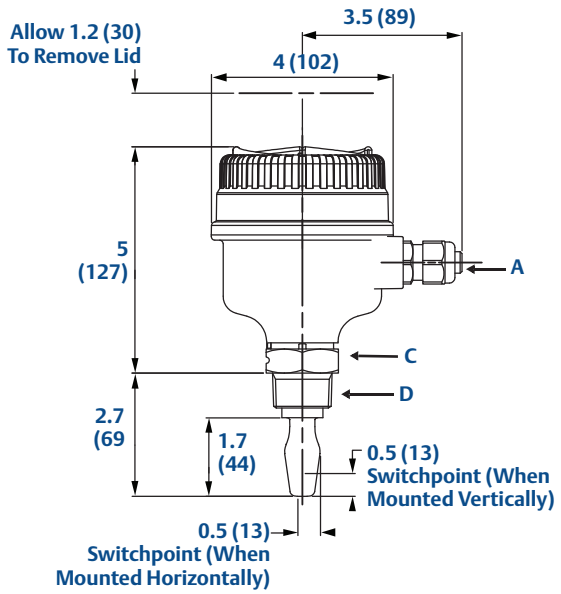

ALUMINUM/SST HOUSING

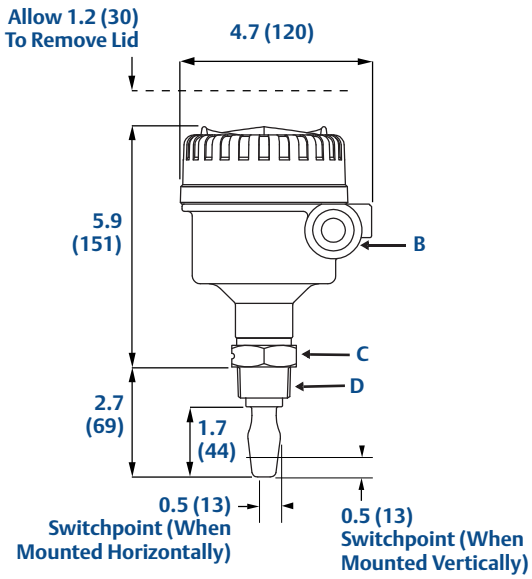

NOTE: FOR HYGIENIC SQUING 2 DIMENSIONS, SEE TYPE 1 DRAWING DOWNLOADS ON WEB SITE

A. Cable Entry M20x1.5 or $^{1}/_{2}$-in. NPT
B. Cable Entry M20x1.5 or $^{3}/_{4}$-in. NPT
C. 1.6 (40) A/F Hexagon
D. $^{3}/_{4}$-in. or 1-in. Thread

Thread mounting (extended length)

Note: Dimensions are in inches (millimeters)

GLASS-FILLED NYLON HOUSING

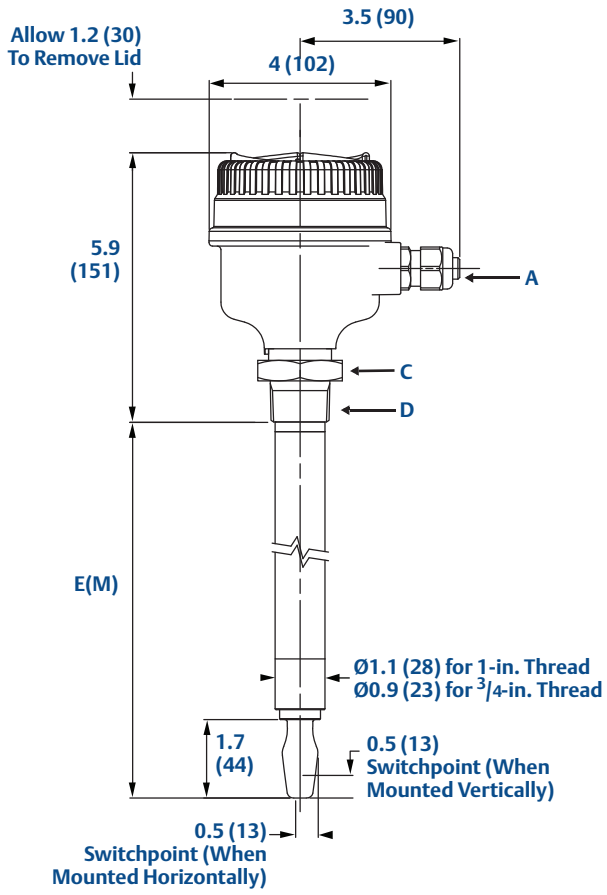

ALUMINUM/SST HOUSING

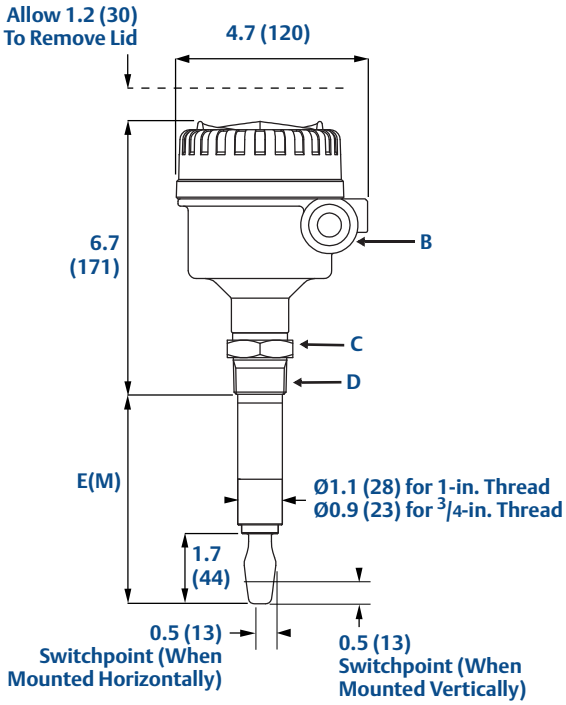

NOTE: FOR HYGIENIC SQUING 2 DIMENSIONS, SEE TYPE 1 DRAWING DOWNLOADS ON WEB SITE

A. Cable Entry M20x1.5 or 1/2-in. NPT
B. Cable Entry M20x1.5 or 3/4-in. NPT
C. 1.6 (40) A/F Hexagon
D. 3/4-in. or 1-in. Thread

Table 6. Fork length for threaded Squing 2

Process Connection	Standard Length Fork Length Code A	Minimum Length Fork Length Code E (M)	Maximum Length Fork Length Code E (M)(1)
3/4-in. Thread	1.7 in. (44 mm)	3.75 in. (95 mm)	157.5 in. (4000 mm)
1-in. Thread	1.7 in. (44 mm)	3.74 in. (94 mm)	157.5 in. (4000 mm)

(1) Maximum extended length of fork with hand-polished option is 39.4 in. (1000 mm).

Flange mounting (standard length)

Note: Dimensions are in inches (millimeters)

GLASS-FILLED NYLON HOUSING

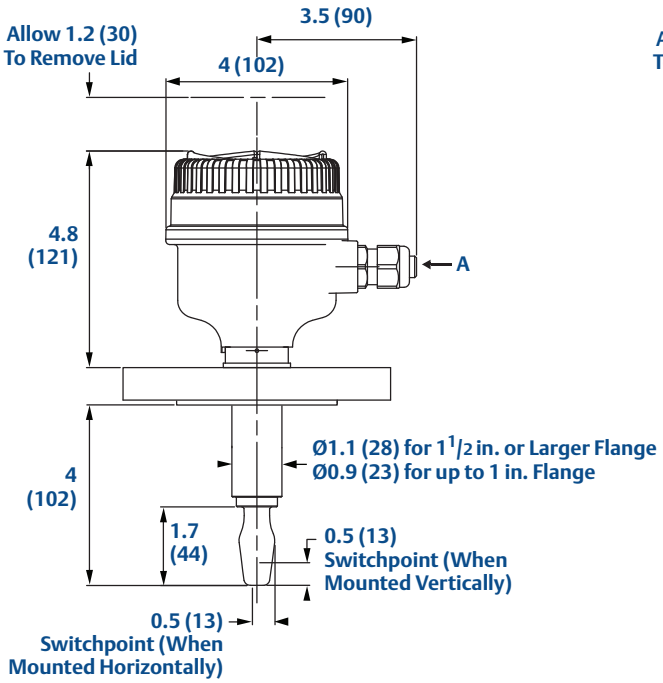

ALUMINUM/SST HOUSING

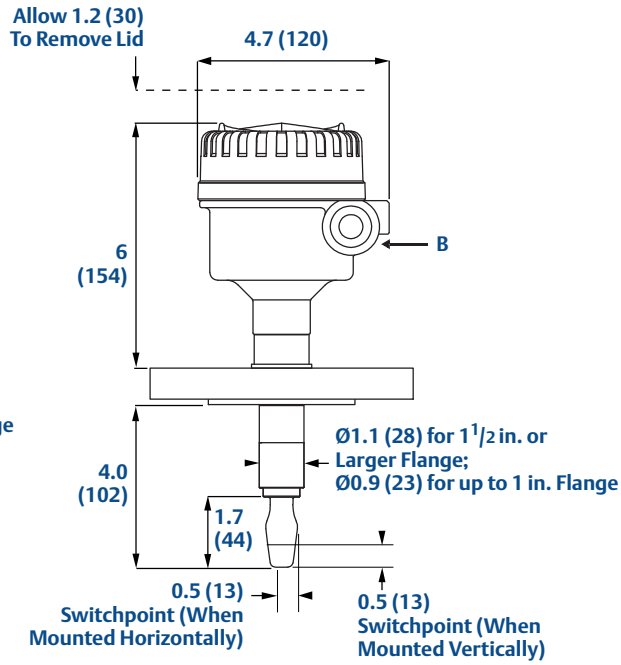

A. Cable Entry M20x1.5 or 1/2-in. NPT
B. Cable Entry M20x1.5 or 3/4-in. NPT

Flange mounting (extended length)

Note: Dimensions are in inches (millimeters)

GLASS-FILLED NYLON HOUSING

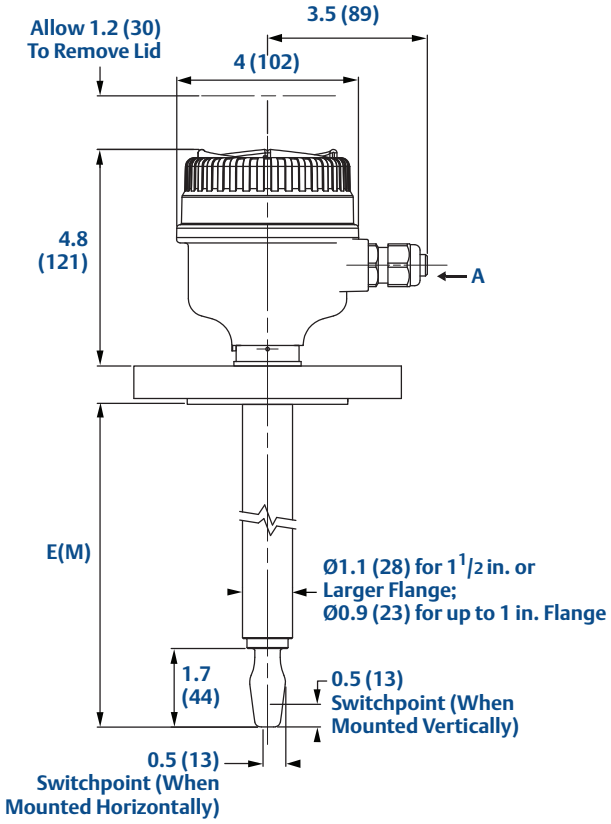

ALUMINUM/SST HOUSING

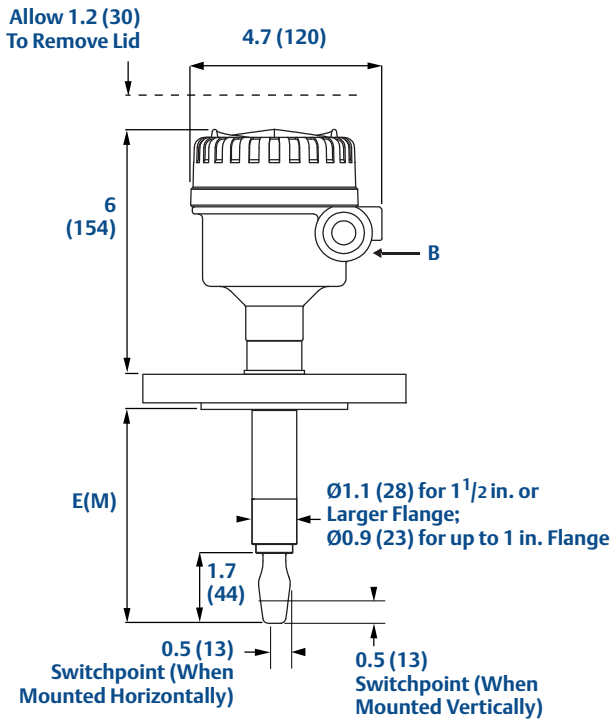

A. Cable Entry M20x1.5 or 1/2-in. NPT
B. Cable Entry M20x1.5 or 3/4-in. NPT

Table 7. Fork length for flanged Squing 2

Process Connection Material	Standard Length Model Code H	Minimum Length Model Code E (M)	Maximum Length Model Code E (M)
Stainless steel(1)	4 (102)	3.5 (89)	157.5 (4000)
ECTFE/PFA co-polymer coated	4 (102)	3.5 (89)	59.1 (1500)
Alloy C and Alloy C-276	4 (102)	3.5 (89)	157.5 (4000)

(1) Maximum extended length of fork with hand-polished option is 39.4 in. (1000 mm).

The Emerson logo is a trademark and service mark of Emerson Electric Co.
Rosemount is a registered trademark of Rosemount Inc.
Mobrey is a registered trademark of Rosemount Measurement Ltd.
All other marks are the property of their respective owners.
Standard Terms and Conditions of Sale can be found at www.rosemount.com\terms_of_sale

© 2012 Rosemount Measurement Ltd. All rights reserved.

Emerson Process Management
Rosemount Measurement Ltd.
158 Edinbugh Avenue,
Slough, Berks., SL1 4UE, UK
Tel +44 (0)1753 756600
Fax +44 (0)1753 823589
www.emersonprocess.com

Emerson Process Management
Rosemount Inc.
8200 Market Boulevard
Chanhassen MN 55317, USA
Tel (USA) 1 800 999 9307
Tel (International) +1 952 906 8888
Fax +1 952 906 8889

mobrey

EMERSON™
Process Management

Product Data Sheet
February 2015
IP210

Mobrey Mini-SQUING

Compact Vibrating Fork Liquid Level Switch

- Function virtually unaffected by flow, turbulence, bubbles, foam, vibration, solids content, coating, properties of the liquid, and product variations
- No need for calibration and requires minimum installation procedures
- Polarity insensitive and short circuit protection
- Industry standard plug/socket connection
- No moving parts or crevices means virtually no maintenance
- Electronic, self-checking, and condition monitoring - Heartbeat LED gives status and health information
- Magnetic test point makes functional test easy
- Compact design, small in size and weight
- “Fast Drip” Fork Design gives quicker response time especially with viscous liquids
- Hygienic connections

mobrey

EMERSON™
Process Management

Overview of the Mobrey Mini-SQUING

Threaded process connection

Tri-Clamp process connection

Measurement principle

The Mobrey Mini-SQUING is designed using the principle of a tuning fork. A piezo-electric crystal oscillates the forks at their natural frequency. Changes to this frequency are continuously monitored. The frequency of the vibrating fork sensor changes depending on the medium in which it is immersed. The denser the liquid, the lower the frequency.

When used as a low level alarm, the liquid in the tank or pipe drains down past the fork, causing a change of natural frequency that is detected by the electronics and switches the output state.

When the Mini-SQUING is used as a high level alarm, the liquid rises in the tank or pipe, making contact with the fork which then causes the output state to switch.

Compact and lightweight

'Fast Drip' forks

Key features and benefits

- Virtually unaffected by turbulence, foam, vibration, solids content, coating, or liquid properties
- Stainless steel housing and plug/socket connection for the fast fit, high volume user
- Compact and lightweight design for side or top mounting
- The industry standard DIN 43650 plug/socket is used for a fast connection. The polarity insensitivity and short circuit protection make electrical hook-up safe and easy
- The Mini-SQUING is designed for operation in temperatures from –40 to 302 °F (–40 to 150 °C)
- The 'heartbeat' LED gives status and health information on the Mini-SQUING
- 'Fast Drip' fork design gives quicker response time, especially with viscous liquids
- Rapid wet-to-dry time for highly responsive switching
- Fork shape is optimized for hand polishing to meet hygienic requirements
- No moving parts or crevices for virtually no maintenance

Contents

Overview of the Mobrey Mini-SQUING ..... page 32
Mobrey Mini-SQUING Ordering Information .... page 34
Specifications ..... page 35
Product Certifications ..... page 36
Dimensional Drawing ..... page 37

Fit and forget

- Once installed, the Mini-SQUING is ready to go.
  It needs no calibration and requires minimum installation
- The 'heartbeat' LED is visible through the end cap and gives an instant visual indication that the unit is operational
- Functional testing of the instrument and system is easy with a magnetic test point
- You can install, and forget it

Superior performance

- Functionality is virtually unaffected by flow, turbulence, bubbles, foam, or vibration
- The 'Fast Drip' design allows the liquid to be quickly drawn away from the fork tip, making the Mini-SQUING quicker and more responsive in high density or viscous liquid applications

Applications

- Overfill protection
- High and low level alarms
- Leak detection
- Run dry or pump protection
- Pump control or limit detection
- Hygienic applications

Overfill protection

High and low level alarm

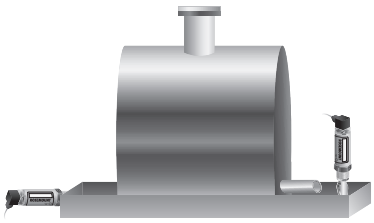

Leak detection

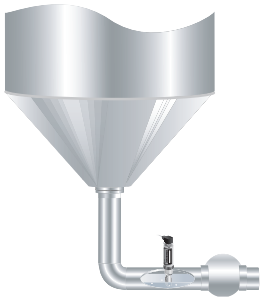

Pump protection

Mobrey Mini-SQUING Ordering Information

Table 1. Mobrey Mini-SQUING ordering information

Model	Product Description
VT	Compact Vibrating Fork Liquid Level Switch
Electronic Type	
Standard	
0	Direct load switching with plug connection (2 wire) 21 to 264 Vac 50/60Hz, 21 to 264 Vdc
1	PNP/PLC low voltage switching with plug connection 18 to 60 Vdc
Process Connection Size / Type	
Standard	
0	3/4-in. BSPT (R) thread
3	1-in. BSPT (R) thread
5	3/4-in. NPT thread
7	2-in. (51 mm) Tri-clamp
F	1-in. BSPP (G) thread
L	1-in. BSPP (G) Semi-extended 4.6 in. (116 mm)
Typical Model Number: VT 0 7	

Table 2. Spare parts and accessories ordering information

Spares and Accessories	
Standard	
SK331	Seal for 1-in. BSPP (G1A). Material: Non-asbestos BS7531 grade X carbon fiber with rubber binder
SK267	Hygienic adaptor boss for 1-in. BSPP model. Material: 316 SST fitting. Fluorocarbon (FPM/FKM) O-ring
SK266	Hygienic mounting kit for 2-in. (51 mm) Tri-clamp model. Includes vessel fitting, clamp ring, and seal. Material: 316 SST and NBR Nitrile
MSP-MMS	Telescopic test magnet

Specifications

Material selection

Emerson provides a variety of Mobrey products with various product options and configurations including materials of construction that can be expected to perform well in a wide range of applications. The Mobrey product information presented is intended as a guide for the purchaser to make an appropriate selection for the application. It is the purchaser's sole responsibility to make a careful analysis of all process parameters (such as all chemical components, temperature, pressure, flow rate, abrasives, contaminants, etc.), when specifying product, materials, options and components for the particular application. Emerson Process Management is not in a position to evaluate or guarantee the compatibility of the process fluid or other process parameters with the product, options, configuration or materials of construction selected.

Physical

Product

- Mobrey Mini-SQUING Compact Liquid Level Switch

Measuring principle

- Vibrating Fork

Applications

- Most liquids including coating liquids, aerated liquids, and slurries

Mechanical

Process material

- 316L Stainless Steel (1.4404)
- For Tri-Clamp connection, hand polished to better than 0.8 µm. Gasket material for 1 in. BSPP (G1) is Non-asbestos BS7531 Grade X carbon fiber with rubber binder.

Housing materials

- Body: 304 SST with polyester label
- LED window: Flame retardant Polyamide (Pa12) UL94 V2
- Plug: Polyamide glass reinforced
- Plug seals: Nitrile butadiene rubber

Mounting

- $^{3}/_{4}$-in. BSPT (R) or NPT
- 1-in. BSPT (R) or BSPP (G) thread, or
- Hygienic 2-in. (51 mm) Tri-clamp fitting

Dimensional drawings

- See "Dimensional Drawing" on page 37

Ingress Protection (IP) rating

IP66/67 to EN60529

Performance

Hysteresis (water)

- ±0.039-in. (± 1 mm) nominal.

Switching point (water)

- 0.5 in. (13 mm) from fork tip if mounted vertically.
- 0.5 in. (13 mm) from the fork edge if mounted horizontally.
- The switch point varies with different liquid densities.

Functional

Operating pressures

- The final rating depends on the process connection
- Threaded Connection: See Figure 1
- Hygienic Connection: Up to 435 psig (30 barg)

Figure 1. Process pressures graph

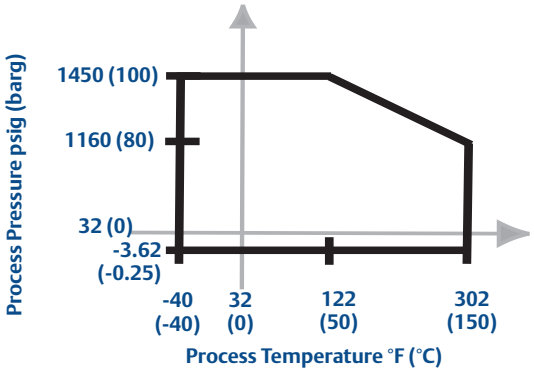

Operating temperatures

- See Figure 2 for the maximum and minimum temperatures

Figure 2. Process temperatures graph

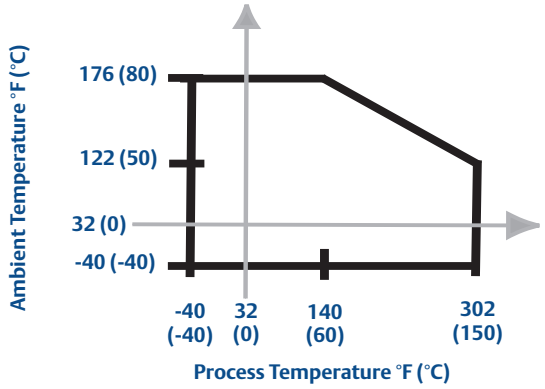

Liquid density

- Minimum 37.5 lb/ft^3 (600 kg/m^3)

Liquid viscosity range

- 0.2 to 10000 cP (centiPoise)

Solids content and coating

- Maximum recommended diameter of solid particles in the liquid is 0.2 in. (5 mm)
- For coating products, avoid 'bridging' of forks

Switching delay

- 1 second dry-to-wet or wet-to-dry

CIP (Clean In Place) cleaning

- Withstands steam cleaning routines up to 302 °F (150 °C)

Electrical

Switching mode

- User selectable (Dry=on or Wet=on) by selecting plug wiring

Cable connection

- Via 4-way plug provided (DIN43650)
- Max. conductor size is 15AWG
- 4-position orientation (90°/180°/270°/360°)

Conductor size

- Maximum 0.06 in.^{2} (1,5 mm^2)

Cable gland

- PG9 provided. Cable diameter 0.16 to 0.35 in. (4 to 9 mm)

Protection

- Polarity insensitive
- Over-current, short circuit, and load-missing protection
- Surge protection to IEC61326

Grounding

- The Mini-SQUING should always be grounded either through the terminals or using the external ground connection provided

Direct Load Switching (Electronics Type Code 0)	
Operating Voltage	21 to 264 Vac (50 to 60 Hz)/dc
Maximum switched load	500 mA
Maximum peak load	5 A for 40 ms max.
Minimum switched load	20 mA continuous
Voltage drop	6.5 V @ 24 Vdc / 5 V @ 240 Vac
Current draw (load off)	<3.0 mA continuous

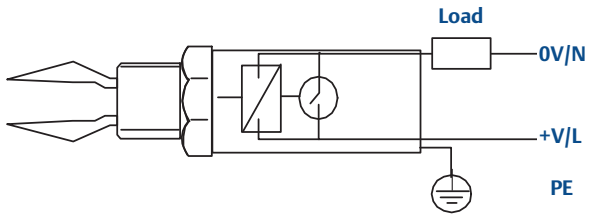

PNP Switching (Electronics Type Code 1)	
Operating Voltage	18 to 60 Vdc
Maximum switched load	500 mA
Maximum peak load	5 A for 40 ms max.
Voltage drop	<3 V
Supply Current	3 mA nominal
Output current (load off)	<0.5 mA

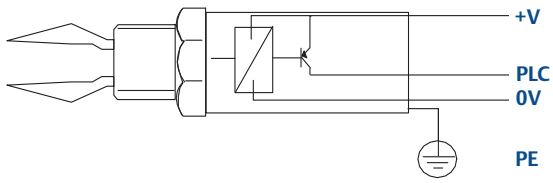

Product Certifications

L.V. Directive

EN61010-1
Pollution degree 2, Category II (264V max),
Pollution degree 2, Category III (150 V maximum)

Electro Magnetic Compatibility (EMC) Directive

EN61326

Overfill Protection

If required, select Product Certificates code U1 for DIBt/WHG overfill protection.
The approval number is Z-65.11-236.

Canadian Registration Number (CRN)

The CRN is 0F04227.2C for model numbers with a NPT threaded process connection selected.

Dimensional Drawing

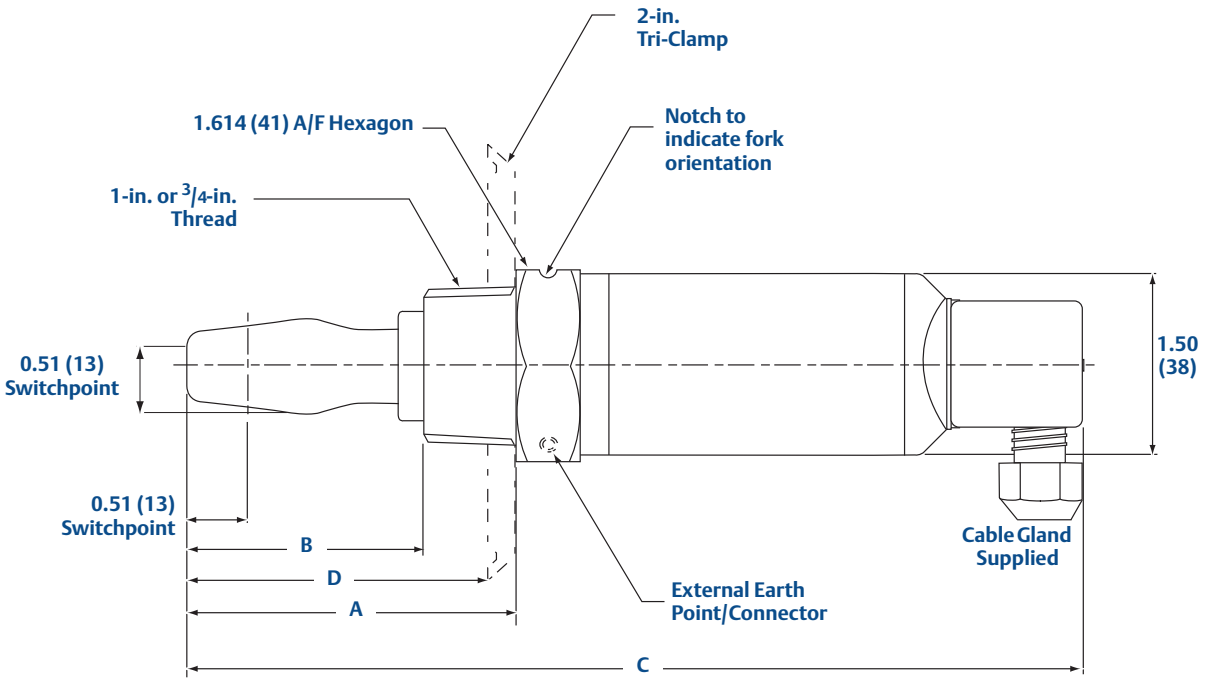

Process Connections	A	B	C	D
3/4-in. BSPT (R)	2.72 (69)	1.97 (50)	7.40 (188)	N/A
3/4-in. NPT	2.72 (69)	1.97 (50)	7.40 (188)	N/A
1-in. BSPT (R)	2.72 (69)	1.97 (50)	7.40 (188)	N/A
1-in. BSPP (G)	3.07 (78)	2.36 (60)	7.91 (201)	N/A
2-in. (51 mm) Tri-Clamp	2.72 (69)	1.97 (50)	7.40 (188)	2.52 (64)
1-in. Semi-extended	4.57 (116)	3.86 (98)	9.41 (239)	N/A

Product Selection
Contents

The Emerson logo is a trademark and service mark of Emerson Electric Co.
Rosemount is a registered trademark of Rosemount Inc.
Mobrey is a registered trademark of Rosemount Measurement Ltd.
All other marks are the property of their respective owners.
Standard Terms and Conditions of Sale can be found at www.rosemount.com\terms_of_sale

© 2015 Rosemount Measurement Limited. All rights reserved.

Emerson Process Management
Rosemount Measurement Ltd.
158 Edinbugh Avenue,
Slough, Berks., SL1 4UE, UK
Tel +44 (0)1753 756600
Fax +44 (0)1753 823589
www.emersonprocess.com

Emerson Process Management
Rosemount Inc.
8200 Market Boulevard
Chanhassen MN 55317 USA
Tel (USA) 1 800 999 9307
Tel (International) +1 952 906 8888
Fax +1 952 906 8889

mobrey

EMERSON™
Process Management

Product Data Sheet
February 2015
IP207

Mobrey Squitch 2

Ultrasonic Liquid Level Switch

- A compact, self-contained, ultrasonic gap sensor, designed for switching in clean, non-aerated liquids
- BSPT and NPT threaded mounting options
- Can be interfaced directly to a PLC using a simple instrument cable
- Simple two-wire installation
- LED indicator for health status
- 316 Stainless steel wetted parts

mobrey

EMERSON
Process Management

Mobrey Squitch 2 Level Switch Overview

Threaded Squitch 2

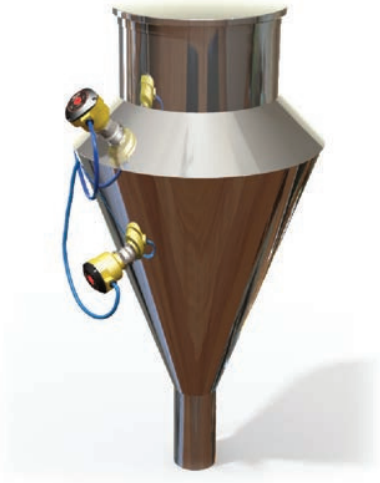

A typical application is point level detection in a wide variety of industries including vegetable oil refineries, confectionery, breweries, food machinery, and pharmaceutical plant.

See "Specification" on page 42 **for technical details.**

Overview

The Mobrey Squitch 2 is a compact, self-contained ultrasonic sensor with a 240 Vac/Vdc switching capability. This switching electronics requires only two electrical connections and can use a simple instrument cable. When connected in series with the load (contactor, starter, relay, etc.), the Squitch 2 acts as a simple switch that is operated by a liquid presence. It may also be interfaced directly to a Programmable Logic Controller (PLC). For this purpose, a dedicated PLC terminal is provided within the housing. The Squitch 2 sensor is for use in non-hazardous areas only. There are a variety of threaded options available, and installation can be in any position on the vessel.

Operation

When a liquid fills the sensor gap, an ultrasonic signal is transmitted across the gap and the presence of liquid is signalled. When the sensor gap is filled with air, there is no signal transmitted and a "dry" state is signalled.

Easy on-site set-up

A selector switch sets the Squitch 2 to energise in either wet or dry conditions.

- When the Squitch 2 is 'off', less than 4.5 mA is drawn through the load and a red LED (viewed through a cover lens) flashes approximately once per second.
- When the Squitch 2 is 'on', the full load current of 0.5 A (maximum) flows and the red LED is lit constantly.

In this way, there is always an indication that the ultrasonic gap sensor is 'alive and well'.

Note

The Mobrey Squitch 2 is not designed to be used in aerated liquids such as carbonated drinks or in liquids with high concentrations of suspended solids such as liquid chocolate. For these applications, vibrating fork technology is recommended – visit the Mobrey brand pages at www.emersonprocess.com for more information.

Features and benefits

- 316 stainless steel wetted parts
- LED status indicator
- May be interfaced directly to a Programmable Logic Controller (PLC), or mounted in pipes for low cost installation
- Low cost, easy to maintain, and no moving parts
- Simple to install Low level fail-safe

Contents

Mobrey Squitch 2 Level Switch Overview . . . . . page 40
Mobrey Squitch 2 Ordering Information . . . . . page 41
Specification . . . . . page 42
Dimensional Drawings . . . . . page 43

Mobrey Squitch 2 Ordering Information

Table 1. Squitch 2 sensor ordering information

Model	Product Description
8	Mobrey Squitch 2 ultrasonic liquid level switch
Mounting	
30	1-in. BSPT Thread (R 1 in.)
34	1-in. BSPP Thread (G 1 in.)
35	1-in. NPT Thread
Wetside Material	
SD	316L Stainless steel (1.4044)
Housing	
S	Yellow glass-filled nylon housing
Use	
0	Non-hazardous (safe) area use only
Output	
0	Direct load switching (24 to 240 Vac/Vdc)
Wetside Finished	
0	Electro polished
Materials Certificates	
0	Typical (on request only)
Fork Length	
0	Standard Length
Typical Model Number: 8 30 SD S 0 0 0 0 0	

Specification

Construction

Material selection

Emerson provides a variety of Mobrey products with various product options and configurations including materials of construction that can be expected to perform well in a wide range of applications. The Mobrey product information presented is intended as a guide for the purchaser to make an appropriate selection for the application. It is the purchaser's sole responsibility to make a careful analysis of all process parameters (such as all chemical components, temperature, pressure, flow rate, abrasives, contaminants, etc.), when specifying product, materials, options and components for the particular application. Emerson Process Management is not in a position to evaluate or guarantee the compatibility of the process fluid or other process parameters with the product, options, configuration or materials of construction selected.

Wetside material

- 316L Stainless steel (1.4044)

Dryside material

- Glass-filled nylon, housing yellow, black housing cover

Operating conditions

Process temperature

- –40 to 125 °C

Ambient temperature

- –40 to 50 °C

Process pressure

- 0.25 to 20 bar g

Liquid density (SG)

- 0.6 to 2.0

Liquid viscosity

- 0.2 to 10000 cPs

Switching point (H_20)

- 8.5 mm from tip (when installed vertically) or edge (when installed horizontally)

Hysteresis (H_20)

- ±1 mm nominal

Switching delay

- 1 second dry-to-wet/wet-to-dry

Maximum altitude

- 2000 metres

Maximum humidity

- 100% R.H.

Protection class

- IP66/67

Electrical

Switching mode

- User selectable (Dry = on or Wet = on)

Protection

- Reverse polarity protected. Missing load / short circuit protection

Terminal connection (wire diameter)

- Maximum 2.5 mm^2 (Note national regulations)

Cable gland

- Supplied with M16, cable diameter 5 to 8 mm

Earthing

- Squitch 2 should always be earthed to a protective earthing system

Safety EMC

E.M.C. directive

- EN61326 (Emissions) for Class B Equipment
- EN61326 (Immunity) for continuous un-monitored operation in industrial locations
- EN61010-1

L.V. directive

- Pollution degree 2, Category II (264V max)
- Pollution degree 2, Category III (150V max)

Mechanical

Dimensions

- See "Dimensional Drawings" on page 43

Weight

- 0.43 kg (0.95 lb)

Dimensional Drawings

Mobrey SQUITCH 2 dimensions

Note: Dimensions are in inches (mm) unless otherwise stated.

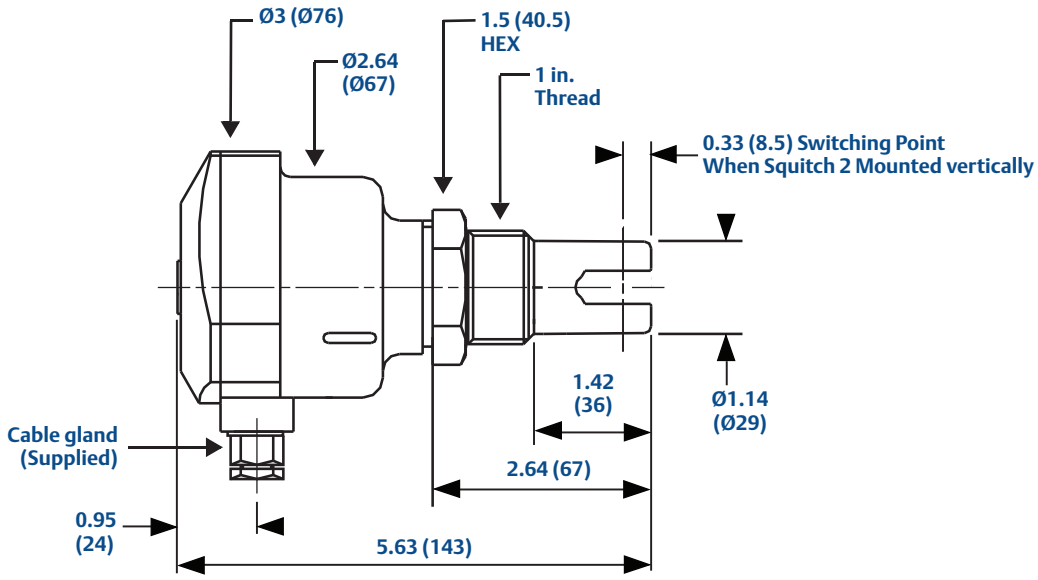

Emerson Process Management
Rosemount Measurement Ltd.
158 Edinbugh Avenue,
Slough, Berks., SL1 4UE, UK
Tel +44 (0)1753 756600
Fax +44 (0)1753 823589
www.emersonprocess.com

Emerson Process Management
Rosemount Inc.
8200 Market Boulevard
Chanhassen, MN 55317, USA
Tel (USA) 1 800 999 9307
Tel (International) +1 952 906 8888
Fax +1 952 906 8889

The Emerson logo is a trademark and service mark of Emerson Electric Co.
Rosemount is a registered trademark of Rosemount Inc.
Mobrey is a registered trademark of Rosemount Measurement Ltd.
All other marks are the property of their respective owners.
Standard Terms and Conditions of Sale can be found at www.rosemount.com\terms_of_sale

© 2015 Rosemount Measurement Ltd. All rights reserved.

mobrey

EMERSON
Process Management

Product Data Sheet
February 2015
IP117

Mobrey 003

Ultrasonic Liquid Level Switch

- Self-contained liquid level alarm
- Manufactured in Polyphenylene Sulphide (PPS) for corrosion resistance in most liquids
- Threaded process connections for tank mounting
- No moving parts
- European Directive compliance

mobrey

EMERSON™
Process Management

Overview of the Mobrey 003 Level Switch

The Mobrey 003 Ultrasonic Level Switch are manufactured in Polyphenylene Sulphide (PPS) for corrosion resistance in most liquids. This range of sensors can be mounted in any position in a tank using either a 1-in. or ¾-in. thread available in BSPT and NPT thread forms. A thread is provided on each side of a hexagonal boss to allow either external or internal / pole mounting of the sensor.

Comprising a one piece moulded body with an integral pcb, the 003 level switch is factory sealed and supplied with a 10 ft. (3 m) flying lead for customer connection.

The Mobrey 003 switch is designed for high or low level alarm duties to give a voltage free contact or solid state transistor output for alarm signalling or as part of a pump control system.

Operation

The moulded body contains two piezo-electric crystals, one each side of a gap at the tip of the sensor. An ultrasonic signal is transmitted from one crystal into the gap, but if there is air or gas in the sensor gap then the signal is not received by the other crystal. However, if there is a liquid present, the signal will be transmitted across the gap and the integral electronics will switch the output circuitry to signal the presence of a liquid.

Typical applications

- Low level alarms in header tanks
- Pump control duty in feeder tanks
- High and low alarms in storage tanks
- Level and pump control in storage tanks
- Small or thin wall tanks
- Bund level detection
- Steering gear oil

Features and benefits

- Relay or solid-state output
- Corrosion resistant PPS construction
- 1-in. or ¾-in. threaded mounting
- Small in-tank dimensions
- 24 Vac or dc powered
- Lightweight
- No moving parts

Installation

The 003 sensor may be mounted at an angle in the vessel, although care should be taken to ensure that the liquid is free to drain out of the sensor gap. Position the sensor away from entry or exit points to avoid areas of excessive turbulence or aeration, and avoid installation in the direct flow of liquid. Ensure a clearance of at least 1 in. (25 mm) from all sensor surfaces to vessel wall to avoid forming air pockets or sludge traps.

Contents

Overview of the Mobrey 003 Level Switch . . . . . page 46
Mobrey 003 ordering information . . . . . page 47
Specification . . . . . page 48
Dimensions . . . . . page 49

Mobrey 003 Level Switch Ordering Information

Table 1. Mobrey 003 ordering information

Model	Product Description
003	Integral ultrasonic level sensor, polyphenylene sulphide construction
Output Type	
S	Integral SPCO relay (energised when sensor is wet)
H	Two open-drain FET transistors (one conducting when sensor is wet; and the other conducting when the sensor is dry)
Mounting Thread	
0	3/4-in. BSPT dual
2	1-in. BSPT dual
5	1-in. NPT dual
Cable Length	
/ M03(1)	PVC sheathed, 10 ft. (3 m), 5-core 7 / 0.2 mm
Typical Model Number: 003 S 2 / M03	

(1) 3 m of cable supplied as standard. Contact the factory if other lengths are required. The maximum cable length is 50 m.

Figure 1. Schematic for 003S* models

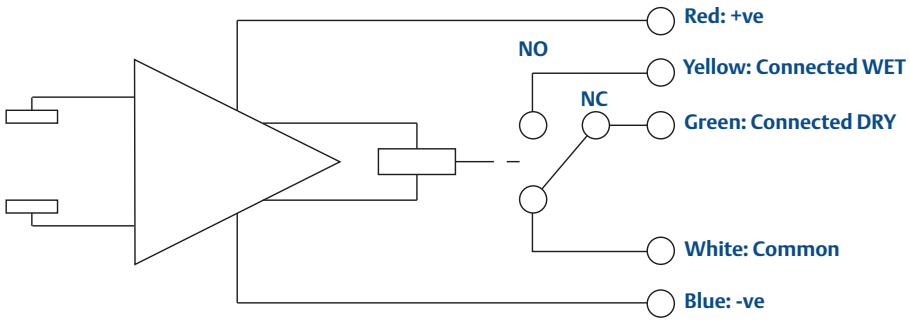

Figure 2. Schematic for 003H* models

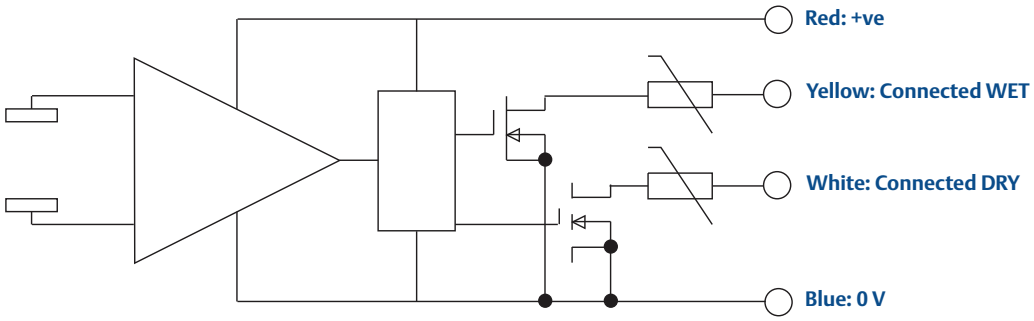

Specification

Mobrey 003S*

Operating pressure

- 72.5 psi (5 bar)

Operating temperature

- –4 to 158°F (–20 to 70 °C)
- *Ambient temperature is same as operating temperature*

Minimum liquid specific gravity

- 0.50

Maximum viscosity

- 5000 cSt. at 68 °F (20 °C)

Switching response

- 50 ms dry-to-wet; 0.5 s wet-to-dry

Hysteresis

- < 0.12 in. (4 mm)

Repeatability

- ±0.08 in. (2 mm)

Overall length

- 4.33 in. (110 mm)

Length into tank (external mount)

- 3.11 in. (79 mm)

Body diameter

- 0.87 in. (22 mm)

Switching function

- SPCO relay (energized wet)
- Maximum switched current:
  1 A at 30 V residual; 0.25 A at 30 V inductive
- 30 V maximum switched voltage

Power supply

- 18 to 30 Vdc or ac

Current drawn when dry

- 10 mA nominal

Current drawn when wet

- 25 mA maximum

Cable

- 10 ft. (3 m); 5-core 7/0.2 mm(0.008 in.),
  PVC cable sheathing

IP Rating of Sensor

- NEMA 6P (10 ft.) / IP66/IP68 (3 m)

Note: The 003 level switch is not suitable for use in intrinsically safe circuits or for the direct starting of large motors.

Mobrey 003H*

Operating pressure

- 72.5 psi (5 bar)

Operating temperature

- –40 to 221 °F (–40 to 105 °C)
- *Same as operating temperature*

Minimum liquid specific gravity

- 0.50

Maximum viscosity

- 5000 cSt. at 68 °F (20 °C)

Switching response

- 50 ms dry-to-wet; 0.5 s wet-to-dry

Hysteresis

- < 0.12 in. (4 mm)

Repeatability

- ±0.08 in. (2 mm)

Overall length

- 4.33 in. (110 mm)

Length into tank (external mount)

- 3.11 in. (79 mm)

Body diameter

- 0.87 in. (22 mm)

Switching function

- 2 x FET open drain (short-circuit protected)
- 100 mA maximum switched current
- 30 V maximum switched voltage

Power supply

- 18 to 30 Vdc or ac

Current drawn when dry

- 8 mA nominal (4 mA minimum)

Current drawn when wet

- 16 mA nominal (20 mA maximum)

Cable

- 10 ft. (3 m); 5-core 7/0.2 mm(0.008 in.),
  PVC cable sheathing

IP Rating of Sensor

- NEMA 6P (10 ft.) / IP66/IP68 (3 m)

Dimensions

Figure 3. Mobrey 003 dimensions

Note: Dimensions are in inches (mm) unless otherwise stated.

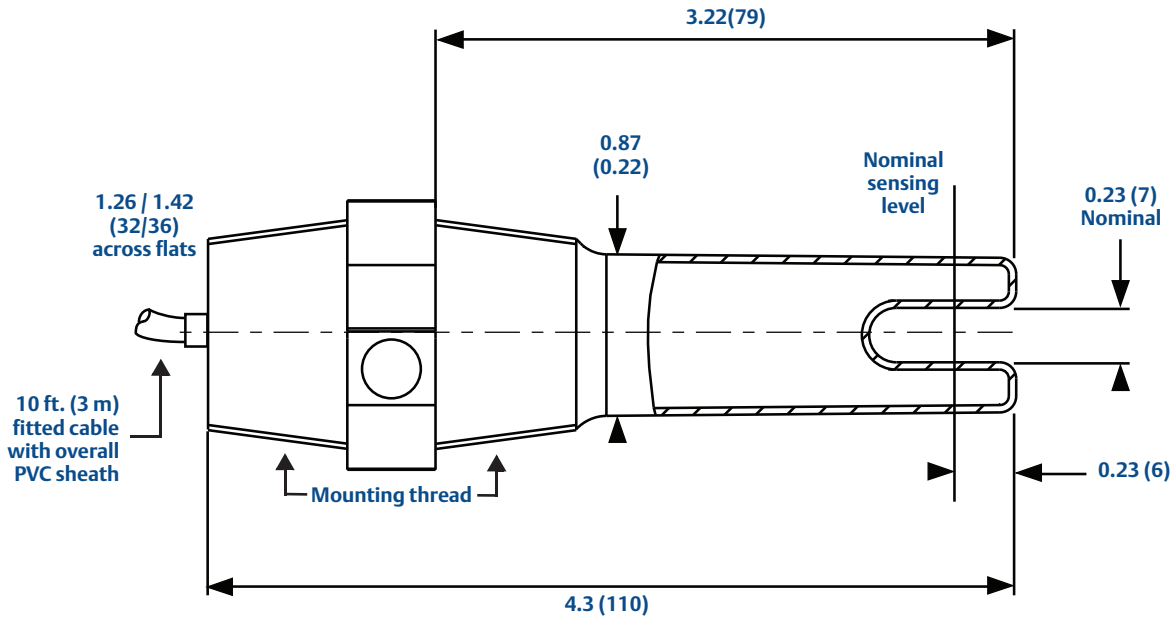

Product Selection
Contents

The Emerson logo is a trademark and service mark of Emerson Electric Co.
Rosemount is a registered trademark of Rosemount Inc.
Mobrey is a registered trademark of Rosemount Measurement Ltd.
All other marks are the property of their respective owners.
Standard Terms and Conditions of Sale can be found at www.rosemount.com\terms_of_sale

© 2015 Rosemount Measurement Limited. All rights reserved.

Emerson Process Management
Rosemount Measurement Ltd.
158 Edinbugh Avenue,
Slough, Berks., SL1 4UE, UK
Tel +44 (0)1753 756600
Fax +44 (0)1753 823589
www.emersonprocess.com

Emerson Process Management
Rosemount Inc.
8200 Market Boulevard
Chanhassen, MN 55317, USA
Tel (USA) 1 800 999 9307
Tel (International) +1 952 906 8888
Fax +1 952 906 8889

mobrey

EMERSON™
Process Management

Product Data Sheet
December 2014
IP201

Mobrey Ultrasonic Liquid Level Detection

Systems for Interface Applications

CE

- Choice of Mobrey ultrasonic liquid point level switches for use in tanks and pipelines
- Mobrey MCU200 industrial control unit with alarm and fault output relays
- No moving parts
- Simple installation
- Unaffected by conductivity, droplets, most coatings, or liquid color/opacity

Product Selection
Contents

mobrey

EMERSON
Process Management

Ultrasonic Liquid Level Detection System Overview

Mobrey 402SD
Tank-Mounted Ultrasonic Point Level Switch
(Gap Type Sensor)

Mobrey 433SD
Tank-Mounted Ultrasonic Point Level Switch
(Gap Type Sensor)

Mobrey 442SD
Ultrasonic Point Level Switch for Pipe Section
(Gap Type Sensor)

Mobrey MCU200 Series
Industrial Control Unit
(MCU201/MCU203)

Ultrasonic liquid point level switches (gap type sensors) are used in non-hazardous area industrial processes to detect high or low liquid levels or liquid interface.

Mobrey ultrasonic point level switches are activated when there is a liquid present between the sensor's transmitter and receiver crystals. In this way, the absence of liquid results in a low level being indicated.

The level switches are fitted with dual-coaxial cable for connection to a control unit. This cable can be extended with suitable coaxial extensions up to 164 ft. (50 m).

Typical applications include interface detection duty for immiscible liquids and sludge blanket level.

See "Specifications" on page -57 for technical details.

Mobrey ultrasonic liquid level control systems for Interface Applications Contain

- A wall-mountable Mobrey MCU200 Series industrial control unit for monitoring the level switch state and provide the required switching function
- A tank-mountable Mobrey 402SD or 433SD ultrasonic point level switch containing transmitter and receiver piezo-electric crystals

Mobrey MCU200 Series Industrial Control Units

The MCU201 and MCU203 control units provide simple and economical control electronics for wall-mounting near a tank or pipeline containing a single ultrasonic level switch.

MCU200 Series features:

- Wall-mounting IP65 polycarbonate enclosure
- 115/230 Vac (*MCU201*) or 24 Vdc (*MCU203*)
- Suitable for use with all Mobrey ultrasonic liquid point level switches
- DPDT relay output for wet-to-dry or dry-to-wet changeover indication, external control, or alarm condition indication
- Accepts a voltage-free contact input e.g. to actuate a pump control function via the output DPDT relay
- Three LED indicators – Normal, Alarm, and Fault
- Selectable time delay
- Continuous cable check (between sensor and MCU200)

Contents

Ultrasonic Liquid Level Detection System Overview . . . page 52
Ordering Information for 433SD . . . . . page 54
Ordering Information for 402SD and 442SD . . . . . page 55
Ordering Information for MCU200 Series Control Units page 56
Specifications . . . . . page 57
Dimensional Drawings . . . . . page 58

Interface detection and sludge measurement

Ultrasonic technology can be used to discriminate between immiscible liquids to indicate the interface and to detect and monitor suspended solids.

Interface detection (402SD)

For interface detection between immiscible liquids, two techniques are available: *ultrasonic attenuation* and *ultrasonic refraction*.

Ultrasonic attenuation is the reduction in beam energy as it is transmitted through the liquid. Viscous liquids, emulsions, and liquids with entrained solids generally have a higher ultrasonic attenuation than low viscosity clear liquids such as water. When the attenuation difference is sufficient, the amplifier gain can be adjusted so that the ultrasonic beam passes through the less attenuative liquid but is stopped by the more attenuative liquid.

The refraction technique is used to detect the interface where two immiscible liquids have similar attenuations. When the sensor is oriented at an angle of 10 degrees from the horizontal, and the interface level is within the gap of the level switch, a small signal is received. The gain of the MCU200 Series control unit can be set to actuate the relay when little signal is received. For further information on suitability of this application, consult your local Customer Care representative.

Sludge measurement (433SD and 442SD)

Solids suspended in a liquid will scatter ultrasonic beams, causing attenuation. This attenuation depends on the size and nature of the particles.

For typical sewage sludges, it is possible to use Mobrey ultrasonic systems to detect 1% to 15% suspended solids within a slurry. Industrial slurries such as fine pottery slips can often be measured up to 65% solids by weight.

The 433SD sensor is normally suspended in a tank or separator. The 442SD sensors are typically installed as a pair in a section of pipe to detect sludge density.

ULTRASONIC ATTENUATION

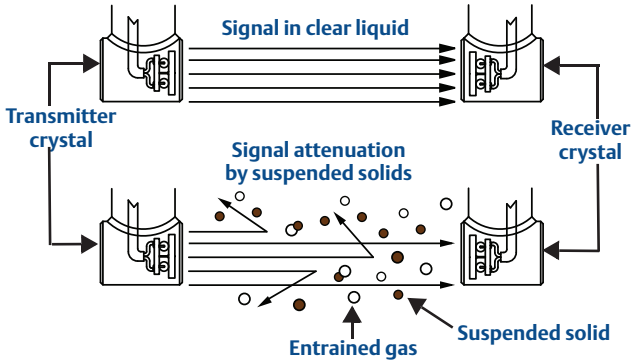

INTERFACE DETECTION BY ATTENUATION

Sensor in oil:
The ultrasonic beam is attenuated and will not reach the receiver crystal

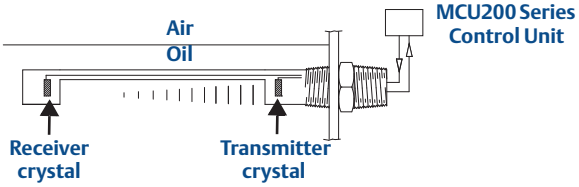

Sensor in water:
The ultrasonic beam reaches the receiver crystal

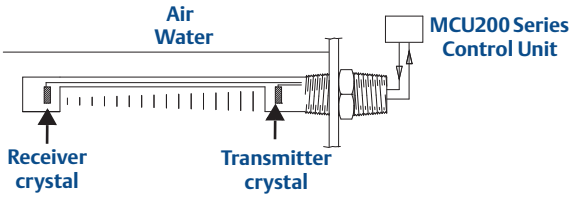

INTERFACE DETECTION BY REFRACTION

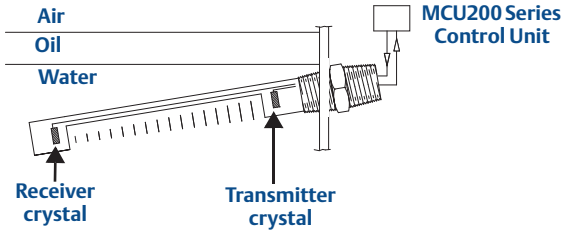

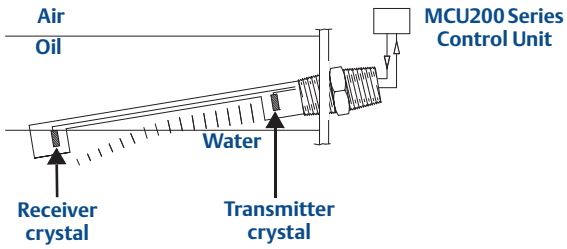

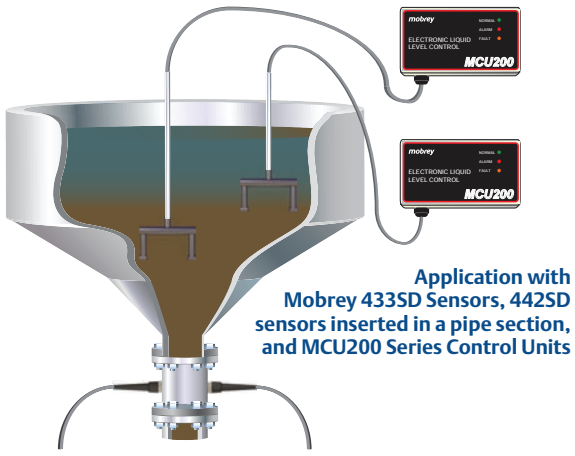

Application with Mobrey 433SD Sensors, 442SD sensors inserted in a pipe section, and MCU200 Series Control Units

Ordering Information for 433SD

- Level switches may be mounted in any orientation to signal liquid presence or at a 10 degree angle to detect the interface
- Ultrasonic sensor operation can be adversely affected by high aeration or foam in the liquid. If you have an application query, contact Customer Support for advice on the selection of a suitable liquid level detection system
- Supplied with 33 ft. (10 m) of cable as standard. Contact Rosemount Measurement for other cable lengths up to 164 ft. (50 m)
- If the MCU control unit is required, add MCU201 (115/230 Vac) or MCU203 (24 Vdc) at the time of ordering the 402SD, 433SD or 442SD

Additional information

MCU201/203 ordering: page 56
Dimensions: page 58
Specifications: page 57

Table 1. 433SD ordering information

Model	Product Description
433SD	Tank-mountable sensor, ¾-in. BSPT, non-hazardous area use only
Gap Size – see Table 2 for measurement ranges in %solids	
801M1(1)	4-in. (100 mm) gap sensor for MCU200 Series
805M1(1)	6-in. (150 mm) gap sensor for MCU200 Series
802M1(1)	8-in. (200 mm) gap sensor for MCU200 Series
803M1(1)	12-in. (300 mm) gap sensor for MCU200 Series
804M3(1)	18-in. (450 mm) gap sensor for MCU200 Series
Cable Length(2)	
/ M10	Supplied with 33 ft. (10 m) PTFE-insulated dual-coaxial cable
Typical Model Number: 433SD 805M1 / M10	

(1) If the MCU control unit is required, add MCU201 (115/230 Vac) or MCU203 (24 Vdc) at the time of ordering a level switch.

(2) For other cable lengths, contact Rosemount Measurement.

Table 2. Typical Measuring Ranges in %solids for Mobrey 433SD Sensors

Sensor Gap Size	PRIMARY SLUDGE (1 MHz)	PRIMARY SLUDGE (3.7 MHz)	SECONDARY SLUDGE (3.7 MHz)
4 in. (100 mm)	3 to 29%	1 to 6%	2 to 15%
6 in. (150 mm)	2 to 19%	1 to 4%	1 to 10%
8 in. (200 mm)	2 to 14.5%	0.5 to 3%	1 to 7.5%
12 in. (300 mm)	1 to 10%	0.5 to 2%	0.5 to 5%
18 in. (450 mm)	N/A	0.5 to 1.3%	0.5 to 3.3%
Note: These %solid ranges are based on typical attenuation factors for municipal wastewater sludge.			

Ordering Information for 402SD and 442SD

402SD

442SD

- Level switches may be mounted in any orientation to signal liquid presence
- Ultrasonic sensor operations can be adversely affected by high aeration, solids, or foam in the liquid. If you have an application query, contact Customer Support for advice on the selection of a suitable liquid level detection system
- Supplied with 10 ft. (3 m) of cable as standard. Contact Rosemount Measurement for other cable lengths up to 164 ft. (50 m)
- If the MCU control unit is required, add MCU201 (115/230 Vac) or MCU203 (24 Vdc) at the time of ordering the 402SD, 433SD or 442SD

Additional information

MCU201/203 ordering: page 56
Dimensions: page 58
Specifications: page 57

Table 3. 402SD and 442SD ordering information

Model	Product Description
402SD	Interface sensor, ¾-in. BSPT (internal or external thread), non-hazardous area use only
442SD(1)	Pipe-mountable sensors (pair), ¾-in. BSPT (internal or external thread), non-hazardous area use only
Sensor Compatibility with Rosemount Measurement Systems	
80(2)	MCU control unit
Cable Length(3)	
/ M03	Supplied with 10 ft. (3 m) PTFE-insulated dual-coaxial cable
Typical Model Number: 402SD 80 / M03	

(1) This is a pair of opposing sensors for installation horizontally across a customer's own pipe section.

(2) If the MCU control unit is required, add MCU201 (115/230 Vac) or MCU203 (24 Vdc) at the time of ordering a level switch.

(3) For other cable lengths, contact Rosemount Measurement.

Ordering Information for MCU200 Series Control Units

- Wall-mounting IP65 polycarbonate enclosure
- If the MCU control unit is required, add MCU201 (115/230 Vac) or MCU203 (24 Vdc) at the time of ordering the 402SD, 433SD or 442SD
- The 402SD, 433SD, and 442SD sensors and MCU200 Series control units are for use in non-hazardous areas only

Additional information

Specifications: page 57
Dimensions: page 58

Table 4. Mobrey MCU200 Series ordering information

Model	Product Description
MCU201	230/115 Vac version (50/60 Hz) MCU200 Series control unit, **non-hazardous area use only**
MCU203	24 Vdc version (grounded negative) MCU200 Series control unit, **non-hazardous area use only**
Typical Model Number: MCU201	

Specifications

Table 5. Specification for the Mobrey Ultrasonic Point Level Switches (Gap Sensors)

Ultrasonic Point Level Switches	Mobrey 402SD	Mobrey 433SD	Mobrey 442SD
Repeatability	2 mm	2 mm	2 mm
Operating Temperature	–94 to 302 °F (–70 to 150 °C)	–40 to 158 °F (–40 to 70 °C)	–94 to 302 °F (–70 to 150 °C)
Maximum Pressure	1523 psi (105 bar)	1523 psi (105 bar)	1523 psi (105 bar)
Power Consumption	< 10 mW at sensor	< 10 mW at sensor	< 10 mW at sensor
Standard Frequency	3.7 MHz	1 MHz / 3.7 MHz	1 MHz / 3.7 MHz
Standard Cable Length	10 ft. (3 m)	33 ft. (10 m)	10 ft. (3 m) per sensor
Cable Entry	Cable entry to sensor is IP65	Cable entry to sensor is IP68	Cable entry to sensor is IP65
Sensor Cable	Standard is PTFE-insulated dual-coaxial with PVC sheath. Minimum bend radius is 1.4 in. (35 mm)		
Note: The 402SD. 433SD, and 442SD are for non-hazardous area use only			

Table 6. Specification for the Standard Industrial Control Unit (Mobrey MCU201 and MCU203)

Mobrey MCU200 Series	MCU201	MCU203
Number of Level Switch Inputs	1	1
Power Supply (Selector Switch)	110/120 Vac or 220/240 Vac selectable	24 Vdc grounded (earthed) negative
Power Consumption	6 VA	2.4 W
Relay Output	Double-Pole Changeover (DPDT)	
	Energized when sensor is wet or dry (selectable by switch)	
Relay Rating	5A at 230V	5A at 230V
Box Dimensions	7.9 x 4.7 x 3 in. (200 x 120 x 75 mm)	7.9 x 4.7 x 3 in. (200 x 120 x 75 mm)
Box Rating	IP65 Polycarbonate	IP65 Polycarbonate
Holes for glands	3 off 0.63 in. (16 mm) diameter	3 off 0.63 in. (16 mm) diameter
Fixing centres (WxH) for Wall Mount	7.4 x 3.4 in. (188 x 88 mm)	7.4 x 3.4 in. (188 x 88 mm)
Fixing Hole Diameter	0.16 in. (4 mm)	0.16 in. (4 mm)
Frequency Selection	By switch on PC board	By switch on PC board
LED Indicators	Visible through the box lid	
	Green for normal. Red for alarm condition. Amber LED for fault condition	
	Selectable for wet/dry sensor, as appropriate for the application	
Gain Potentiometer	Fitted with scale and separate range switch to adjust for sensor type and site conditions	
Response Time	Selectable delay of 0.5, 2, 8 or 30 seconds	
	Delay selectable for wet-to-dry or dry-to-wet changeover	
	50 ms response in opposite direction	
Sensor Cable Check	Selectable to monitor coax screen to sensor for continuity	
	Fault lights fault LED and sets relay to alarm state	
Auxiliary Input	External closed circuit input to MCU200 latches the output relay to achieve pump control	
Note: MCU200 Series control units are for non-hazardous area use only		

Dimensional Drawings

Mobrey level switch dimensions

Notes

1. Dimensions are in inches (mm).
2. “WH” shows approximate switching level with the gap horizontal.
3. “WV” shows approximate switching level with the gap vertical.

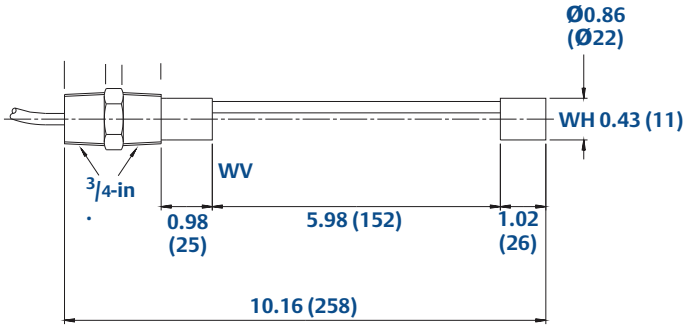

Sensor type 402SD

316 stainless steel

Duty: Interface, immiscible liquids

Liquid type: Clean, viscous with solids

See Table 5 on page 57 for the full specification

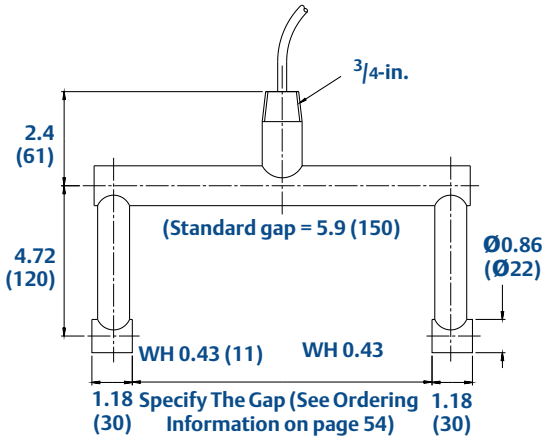

Sensor type 433SD

316 stainless steel

Duty: Sludge blanket or interface, immiscible liquids

Liquid type: Viscous or with solids in suspension

See Table 5 on page 57 for the full specification

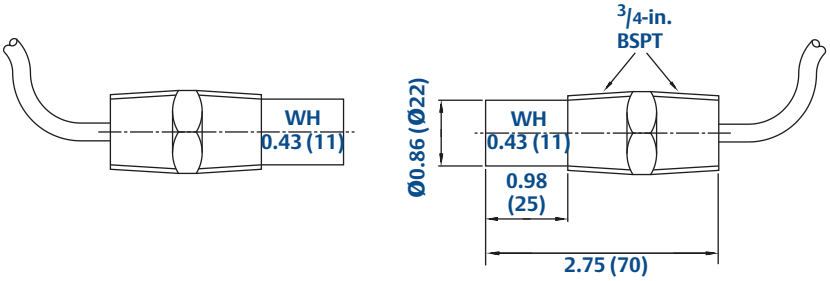

Sensor type 442SD

Across Pipe

Duty: Pipelines

Liquid type: Clean or sludge density

See Table 5 on page 57 for the full specification

Mobrey MCU201/MCU203 Dimensions

Notes
Dimensions are in inches (mm). See Table 6 on page 57 for the full specification.

MOBREY MCU200 SERIES
INDUSTRIAL CONTROL UNIT (MCU201/MCU203)

TOP VIEW

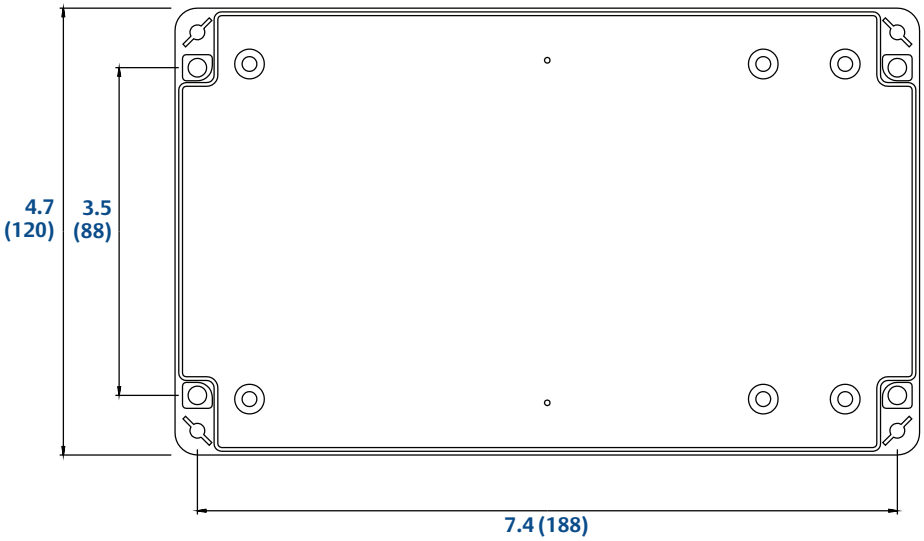

BOTTOM VIEW

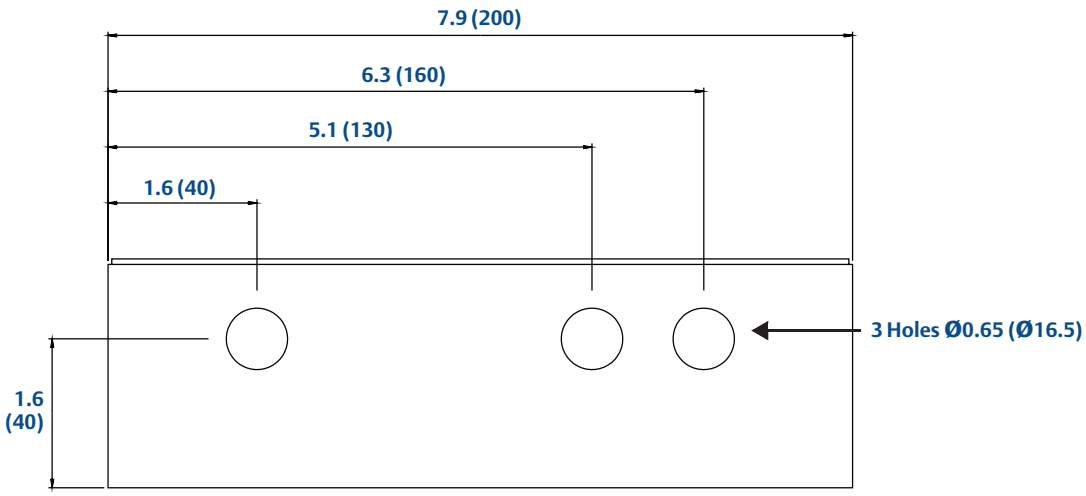

The Emerson logo is a trademark and service mark of Emerson Electric Co.
Mobrey is a registered trademark of Rosemount Measurement Ltd.
Rosemount is a registered trademark of Rosemount Inc.
All other marks are the property of their respective owners.
Standard Terms and Conditions of Sale can be found at www.rosemount.com\terms_of_sale

© 2014 Rosemount Measurement Limited. All rights reserved.

Emerson Process Management
Rosemount Measurement Ltd.
158 Edinbugh Avenue,
Slough, Berks., SL1 4UE, UK
Tel +44 (0)1753 756600
Fax +44 (0)1753 823589
www.emersonprocess.com

Emerson Process Management
Rosemount Inc.
8200 Market Boulevard
Chanhassen, MN 55317, USA
Tel (USA) 1 800 999 9307
Tel (International) +1 952 906 8888
Fax +1 952 906 8889

mobrey

EMERSON
Process Management

Product Data Sheet
February 2015
IP101

Mobrey Magnetic Horizontal Float Switches

For Liquid Level Alarm and Pump Control

- Ideal for industrial applications such as pump control and high or low alarm duty on tanks and pressure vessels
- Simple, rugged, and reliable. Low cost of ownership
- Direct (side or top) or chamber mounting
- Operates in most liquids
- Variety of switch mechanisms for electrical or pneumatic switching
- Selected models are safety certified to IEC 61508 with proven FMEDA, suitable for Safety Integrity Level 1 (SIL 1)
- ATEX and marine approvals

Product Selection
Contents

mobrey

EMERSON
Process Management

Magnetic Horizontal Float Switches

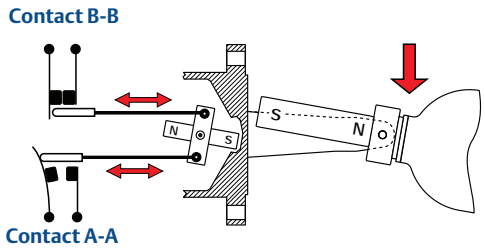

Level switch cross-section – level below float

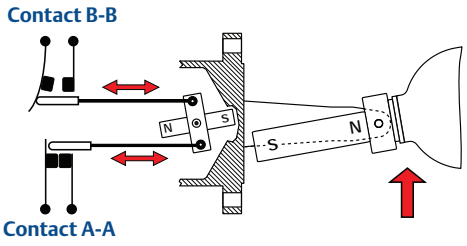

Level switch cross-section – level passes float

High and low alarm application

Measurement principle

Mobrey magnetic horizontal float switches ("float switches") are ideal for high and low liquid level alarm, and pump control duties.

The float switch is designed to open or close a circuit ("switch") as a changing liquid level within a vessel passes the level of the float (the Switch Point).

When the process liquid level is below the Switch Point, contacts B-B are made (together) and contacts A-A are open.

When the process liquid level is above the Switch Point, contacts A-A are made (together) and contacts B-B are open.

Benefits of Mobrey magnetic float switch technology

- Over 100 years of experience – a proven design
- "Fit and Forget"
  – simple, reliable, and cost effective level measurement technology
- Tough, rugged design for long life in aggressive environments
- Operates in almost any liquid at high pressures and temperatures
- Measurement is unaffected by changes in process temperature, dielectric, or the presence of vapors
- Wide range of mounting options and configurations to suit all types of liquid level application and meet site standards

Special features of the Mobrey design

- Magnetically coupled
- No glands or linkages that could cause leaks
- No springs means reduced maintenance
- Snap action switching
- No contact hover or bounce for clean make or break
- Hermetically sealed switch mechanism is available to eliminate freezing and corrosion of contacts and all moving parts

Contents

Magnetic Horizontal Float Switches ..... page 62
Ordering Float Switches ..... page 64
Ordering SIL Certificate and Accessories ..... page 71
Specifications ..... page 73
Dimensional Drawings ..... page 79

Selecting a float switch

Float switches for general purpose applications (aluminum bronze wetside) – *see Table 1 on page 64 for model codes*

- Ideal for industrial applications such as pump control, and high or low alarm duty
- Selected models are certified to IEC61508 (1)
- Marine approvals: Lloyds Register of Shipping (LRS), Germanischer Lloyd, DNV, ABS, BV, RINA, and RMRS

Float switches for general purpose applications (stainless steel wetside) – *see Table 2 on page 65 for model codes*

- Selected models are certified to IEC61508 (1)
- Marine approvals: Lloyds Register of Shipping (LRS), Germanischer Lloyd, DNV, ABS, and RMRS

Float switches for hazardous area applications – *see Table 3 on page 67 for model codes*

- ATEX/IECEx Zone 1 Gas Group IIC, CSA Class 1: Group CD, Technical Regulation Customs Union (EAC) Flameproof, and Lloyds Register of Shipping (LRS) approvals
- Selected models are certified to IEC61508 (1)

Float switches for marine applications – *see Table 4 on page 69 for model codes*

- Submersible (S03, S163 and S195) or hoseproof (S179 and S181)
- Hazardous Area Submersible/Hoseproof (S183, S187, and S189), designed for submersion in vented tanks and mounting from the outside of a tank
- Aluminum bronze or stainless steel enclosure and wetside
- May be submerged to 100 ft. (30 m) head of water (IP68)
- Hazardous area ATEX approval for Zone 1, Gas Group IIC
- Marine approvals: Lloyds Register of Shipping (LRS), Germanischer Lloyd, DNV, ABS, BV, RINA, and RMRS

Suitable for a Safety Integrity Level 1 (SIL 1) environment

Mobrey magnetic float switches can be used in a Safety Instrumented System (SIS). Float switch orders (1) that include the code CERT-SIL-L2049 (page 71) are supplied with a third party certificate of SIL suitability. They have been externally evaluated and certified in accordance with IEC61508 to attain Safety Integrity Level 1 (SIL 1) for a single device.

FLOAT SWITCHES FOR GENERAL PURPOSE APPLICATIONS

Aluminum bronze wetside

S440DA/F84

Stainless steel wetside

FLOAT SWITCHES FOR HAZARDOUS AREA APPLICATIONS

S250DA/F84

FLOAT SWITCHES FOR MARINE APPLICATIONS

Aluminum bronze

316 stainless steel

Hazardous area

(1) Selected models only – see document M310/FSM on the Mobrey brand pages at www.emersonprocess.com for the latest selected models and option codes.

Ordering Float Switches

Specification and selection of product materials, options, or components must be made by the purchaser of the equipment. See page 73 for more information on Material Selection.

Table 1. Ordering information for general purpose float switches (aluminum bronze wetside)

★The Standard offering represents the most common options. The starred options (★) should be selected for best delivery. The Expanded offering is subject to additional delivery lead time.

Model	Product Description		
S	Horizontal Float Switch		
Flange (Head) (1)		**Max. $T_{Process}$** (2)	
Standard			**Standard**
01 (3)	General purpose, aluminum bronze wetside, Mobrey 'A' flange, 261 psi (18 bar)	410 °F (210 °C)	★
Switch Mechanism (4)			
Standard			**Standard**
D	Electrical: 2 independent Single Pole Single Throw (SPST) contact sets		★
P	As type D but with *gold plated contacts*		★
Expanded			
D6	Electrical: 2 independent circuits of Double Pole Double Throw (DPDT) contact sets		
P6	As type D6 but with *gold plated contacts*		
AP (5)	Pneumatic: air pilot valve on/off for switching air circuits		
AM (5) (6)	Pneumatic: air pilot valve for continuous modulating of air controlled circuits		
Enclosure		**Switch Types**	
Standard			**Standard**
A	Aluminum alloy	AP or AM	★
B	Aluminum bronze	D, P, D6, or P6	★
Float (All Ratings at T_{room}) (7)		**Switch Types**	
Standard			**Standard**
F84	General purpose high/low alarm, 316 SST, min. SG 0.65, 500 psi (34.5 bar)	All	★
F68/1 (5)(8)	Horizontal variable differential for pump control/alarm, 316 SST, min. SG 0.72, 500 psi (34.5 bar)	All except AM	★
F68/4 (5)(8)	Horizontal variable differential for pump control/alarm, 316 SST, min. SG 0.85, 500 psi (34.5 bar)	All except AM	★
F21/1 (5)(8)	Vertical pump control or alarm, 316 SST, rod length 1524 mm, 435 psi (30 bar)	All except AM	★
F21/2 (5)(8)	Vertical pump control or alarm, 316 SST, rod length 3048 mm, 435 psi (30 bar)	All except AM	★
F21/3 (5)(8)	Vertical pump control or alarm, 316 SST, rod length 4570 mm, 435 psi (30 bar)	All except AM	★
F104/1 (8)	Straight arm, horizontal, 316 SST, rod length 750 mm, 500 psi (34.5 bar)	All	★
F104/2 (8)	Cranked arm, horizontal, 316 SST, dimensions to be specified, 500 psi (34.5 bar)	All	★
F104/3 (8)	Cranked arm, vertical, 316 SST, dimensions to be specified, 500 psi (34.5 bar)	All	★
F93 (9)	Shrouded for dirty liquids, 316 SST, min. SG 0.75, atmospheric	All	★
F185	General purpose high/low alarm, Alloy 400, min. SG 0.65, 500 psi (34.5 bar)	All	★
Expanded			
F98	General purpose high/low alarm, 316 SST, min. SG 0.45, 500 psi (34.5 bar)	All	
F264	Horizontal limited differential, Alloy 400, min. SG 0.85, 464 psi (32 bar)	All except AM	
Product Certifications			
Standard			**Standard**
NA	No hazardous locations certificates		★
GM (10)	Technical Regulation Customs Union (EAC) Ordinary Locations Mark		★
Typical Model Number: S 01 D B F84 NA			

(1) See page 83 for nozzle and stud lengths.
(2) The maximum process temperature is dependent on the Flange (Head) and selected Float option.
(3) See page 79 for Mobrey flange information.
(4) See "Switch mechanism specifications" on page 77 for information about all switch mechanisms.
(5) The SIL certificate (code CERT-SIL-L2049 in Table 6 on page 71) is not available with this option.
(6) Switch mechanism type AM is not compatible with float types F68/*, F21/*, or F264.
(7) See Table 13 on page 80 for a comparison of the float options listed here.
(8) See pages 83, 84, and 85 for technical float details and length options.
(9) A silicone rubber gaiter is supplied with the 316 SST shroud.
(10) Contact an Emerson Process Management representative for additional information.

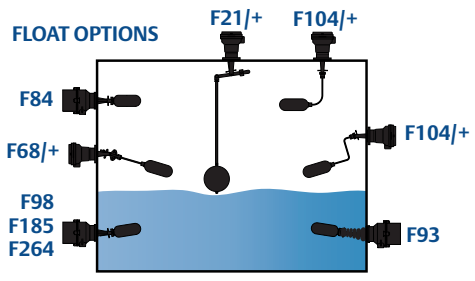

Table 2. Ordering information for general purpose float switches (stainless steel wetside)

★The Standard offering represents the most common options. The starred options (★) should be selected for best delivery.
The Expanded offering is subject to additional delivery lead time.

Model	Product Description		
S	Horizontal Float Switch		
Flange (Head) [1]		**Max. $T_{Process}$** [2]	
Standard			**Standard**
36 [3][4]	General purpose, stainless steel wetside, Mobrey 'A' flange, 490 psi (33.8 bar)	752 °F (400 °C)	★
Expanded			
190 [3][4][5]	General purpose, stainless steel wetside, Mobrey 'A' flange, 490 psi (33.8 bar)	356 °F (180 °C)	
440	General purpose, stainless steel wetside, 3 in. ASME B16.5 Class 150 RF flange	752 °F (400 °C)	
441	General purpose, stainless steel wetside, 4 in. ASME B16.5 Class 150 RF flange	752 °F (400 °C)	
424	General purpose, stainless steel wetside, 3 in. ASME B16.5 Class 300 RF flange	752 °F (400 °C)	
425	General purpose, stainless steel wetside, 4 in. ASME B16.5 Class 300 RF flange	752 °F (400 °C)	
489	General purpose, stainless steel wetside, 3 in. ASME B16.5 Class 600 RF flange	752 °F (400 °C)	
490	General purpose, stainless steel wetside, 3 in. ASME B16.5 Class 900 RF flange	752 °F (400 °C)	
428	General purpose, stainless steel wetside, EN 1092-1 DN 65 PN 16 flange	752 °F (400 °C)	
429	General purpose, stainless steel wetside, EN 1092-1 DN 80 PN 16 flange	752 °F (400 °C)	
430	General purpose, stainless steel wetside, EN 1092-1 DN 100 PN 16 flange	752 °F (400 °C)	
431	General purpose, stainless steel wetside, EN 1092-1 DN 125 PN 16 flange	752 °F (400 °C)	
432	General purpose, stainless steel wetside, EN 1092-1 DN 150 PN 16 flange	752 °F (400 °C)	
417	General purpose, stainless steel wetside, EN 1092-1 DN 65 PN 40 flange	752 °F (400 °C)	
418	General purpose, stainless steel wetside, EN 1092-1 DN 80 PN 40 flange	752 °F (400 °C)	
419	General purpose, stainless steel wetside, EN 1092-1 DN 100 PN 40 flange	752 °F (400 °C)	
433	General purpose, stainless steel wetside, EN 1092-1 DN 125 PN 40 flange	752 °F (400 °C)	
434	General purpose, stainless steel wetside, EN 1092-1 DN 150 PN 40 flange	752 °F (400 °C)	
488	General purpose, stainless steel wetside, EN 1092-1 DN 80 PN 63 flange	752 °F (400 °C)	
435	General purpose, stainless steel wetside, EN 1092-1 DN 100 PN 63 flange	752 °F (400 °C)	
436	General purpose, stainless steel wetside, EN 1092-1 DN 125 PN 63 flange	752 °F (400 °C)	
437	General purpose, stainless steel wetside, EN 1092-1 DN 150 PN 63 flange	752 °F (400 °C)	
Switch Mechanism[6]		**Max. $T_{Process}$** [2]	
Standard			**Standard**
D	Electrical: 2 independent Single Pole Single Throw (SPST) contact sets	752 °F (400 °C)	★
P	As type D but with *gold plated contacts*	752 °F (400 °C)	★
Expanded			
D6	Electrical: 2 independent circuits of Double Pole Double Throw (DPDT) contact sets	752 °F (400 °C)	
P6	As type D6 but with *gold plated contacts*	752 °F (400 °C)	
H6	As type D6 but with *gold plated contacts* and *hermetically sealed moving parts*	482 °F (250 °C)	
B6	As type H6 but *approved for Zone 2 areas*	482 °F (250 °C)	
AP [7]	Pneumatic: air pilot valve on/off for switching air circuits	752 °F (400 °C)	
AM [7][8]	Pneumatic: air pilot valve for continuous modulating of air controlled circuits	752 °F (400 °C)	
Enclosure			
Standard			**Standard**
A	Aluminum alloy		★
Float (All Ratings at T_{room}) [9]		**Max. $T_{Process}$** [2]	
Standard			**Standard**
F84	General purpose high/low alarm, 316 SST, min. SG 0.65, 500 psi (34.5 bar)	752 °F (400 °C)	★
F68/1 [7][10]	Horizontal variable differential for pump control/alarm, 316 SST, min. SG 0.72, 500 psi (34.5 bar)	752 °F (400 °C)	★
F68/4 [7][10]	Horizontal variable differential for pump control/alarm, 316 SST, min. SG 0.85, 500 psi (34.5 bar)	752 °F (400 °C)	★
F21/1 [7][10]	Vertical pump control or alarm, 316 SST, rod length 1524 mm, 435 psi (30 bar)	752 °F (400 °C)	★
F21/2 [7][10]	Vertical pump control or alarm, 316 SST, rod length 3048 mm, 435 psi (30 bar)	752 °F (400 °C)	★
F21/3 [7][10]	Vertical pump control or alarm, 316 SST, rod length 4570 mm, 435 psi (30 bar)	752 °F (400 °C)	★

Table 2. Ordering information for general purpose float switches (stainless steel wetside)

★The Standard offering represents the most common options. The starred options (★) should be selected for best delivery.
The Expanded offering is subject to additional delivery lead time.

F104/1 (10)	Straight arm, horizontal, 316 SST, rod length 750 mm, 500 psi (34.5 bar)	752 °F (400 °C)	★
F104/2 (10)	Cranked arm, horizontal, 316 SST, dimensions to be specified, 500 psi (34.5 bar)	752 °F (400 °C)	★
F104/3 (10)	Cranked arm, vertical, 316 SST, dimensions to be specified, 500 psi (34.5 bar)	752 °F (400 °C)	★
F93 (5)(11)	Shrouded for dirty liquids, 316 SST, min. SG 0.75, atmospheric	356 °F (180 °C)	★
F185	General purpose high/low alarm, Alloy 400, min. SG 0.65, 500 psi (34.5 bar)	752 °F (400 °C)	★
Expanded			
F96	General purpose high/low alarm, 316 SST, min. SG 0.60, 1073 psi (74 bar)	752 °F (400 °C)	
F98	General purpose high/low alarm, 316 SST, min. SG 0.45, 500 psi (34.5 bar)	752 °F (400 °C)	
F106	General purpose high/low alarm, 316 SST, min. SG 0.51, 1073 psi (74 bar)	752 °F (400 °C)	
F107	General purpose high/low alarm, 316 SST, min. SG 0.71, 2900 psi (200 bar)	752 °F (400 °C)	
F88	Interface duties, 316 SST, min. SG 0.80, 1073 psi (74 bar)	752 °F (400 °C)	
F264	Horizontal limited differential, Alloy 400, min. SG 0.85, 464 psi (32 bar)	752 °F (400 °C)	
Product Certifications			
Standard			**Standard**
N1	ATEX II 3 G – (*code N1 is required for the B6 switching mechanism*)		★
NA	No hazardous locations certificates		★
GM (12)	Technical Regulation Customs Union (EAC) Ordinary Locations Mark		★
Typical Model Number: S 36 D A F84 NA			

(1) See page 83 for nozzle and stud lengths.
(2) The maximum allowed process temperature is dependent on Flange (Head), Switch mechanism, and Float options chosen.
(3) There is no back flange fitted to the S36 and S190 flange (head).
(4) See page 79 for Mobrey flange information.
(5) The F93 float and S190 flange (head) can only be used together.
(6) See "Switch mechanism specifications" on page 77 for information about all switch mechanisms.
(7) The SIL certificate (code CERT-SIL-L2049 in Table 6 on page 10) is not available with this option.
(8) Switch mechanism type AM is not compatible with float types F68/+ or F21/+.
(9) See Table 13 on page 80 for a comparison of the float options listed here.
(10) See pages 83, 84, and 85 for technical float details and length options.
(11) A silicone rubber gaiter is supplied with the 316 SST shroud.
(12) Contact an Emerson Process Management representative for additional information.

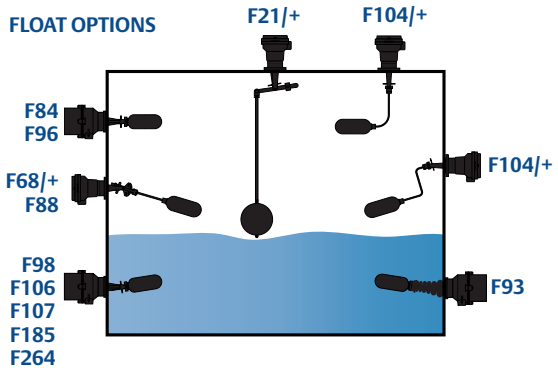

Table 3. Ordering information for float switches in hazardous areas

★The Standard offering represents the most common options. The starred options (★) should be selected for best delivery.
The Expanded offering is subject to additional delivery lead time.

Model	Product Description		
S	Horizontal Float Switch		
Flange (Head) [1]		**Max. $T_{Process}$ [2]**	
Standard			**Standard**
250 [3][4]	Flameproof Zone 1, stainless steel wetside, Mobrey 'G' flange, 304.5 psi (21 bar)	752 °F (400 °C)	★
275 [3][4]	Flameproof Zone 1, gunmetal wetside, Mobrey 'G' flange, 304.5 psi (21 bar)	392 °F (200 °C)	★
Expanded			
256	Flameproof Zone 1, stainless steel wetside, 3 in. ASME B16.5 Class 150 RF flange	752 °F (400 °C)	
257	Flameproof Zone 1, stainless steel wetside, 4 in. ASME B16.5 Class 150 RF flange	752 °F (400 °C)	
278	Flameproof Zone 1, stainless steel wetside, 6 in. ASME B16.5 Class 150 RF flange	752 °F (400 °C)	
251	Flameproof Zone 1, stainless steel wetside, 3 in. ASME B16.5 Class 300 RF flange	752 °F (400 °C)	
254	Flameproof Zone 1, stainless steel wetside, 4 in. ASME B16.5 Class 300 RF flange	752 °F (400 °C)	
260	Flameproof Zone 1, stainless steel wetside, 3 in. ASME B16.5 Class 600 RF flange	752 °F (400 °C)	
261	Flameproof Zone 1, stainless steel wetside, 3 in. ASME B16.5 Class 900 RF flange	752 °F (400 °C)	
253	Flameproof Zone 1, stainless steel wetside, EN 1092-1 DN 80 PN 40 flange	752 °F (400 °C)	
255	Flameproof Zone 1, stainless steel wetside, EN 1092-1 DN 100 PN 40 flange	752 °F (400 °C)	
269	Flameproof Zone 1, stainless steel wetside, EN 1092-1 DN 125 PN 40 flange	752 °F (400 °C)	
272	Flameproof Zone 1, stainless steel wetside, EN 1092-1 DN 80 PN 63 flange	752 °F (400 °C)	
268	Flameproof Zone 1, stainless steel wetside, EN 1092-1 DN 100 PN 63 flange	752 °F (400 °C)	
270	Flameproof Zone 1, stainless steel wetside, EN 1092-1 DN 125 PN 63 flange	752 °F (400 °C)	
271	Flameproof Zone 1, stainless steel wetside, EN 1092-1 DN 150 PN 63 flange	752 °F (400 °C)	
Switch Mechanism [5]		**Max. $T_{Process}$ [2]**	
Standard			**Standard**
D	Electrical: 2 independent Single Pole Single Throw (SPST) contact sets	752 °F (400 °C)	★
P	As type D but with *gold plated contacts*	752 °F (400 °C)	★
Expanded			
D6	Electrical: 2 independent circuits of Double Pole Double Throw (DPDT) contact sets	752 °F (400 °C)	
P6	As type D6 but with *gold plated contacts*	752 °F (400 °C)	
H6	As type D6 but with *gold plated contacts* and *hermetically sealed moving parts*	482 °F (250 °C)	
Enclosure		**Max. $T_{Process}$ [2]**	
Standard			**Standard**
A	Aluminum alloy	752 °F (400 °C)	★
Expanded			
G	Gunmetal	662 °F (350 °C)	
AX [6]	Aluminum alloy, low ambient temperatures –4 to –76 °F (–20 to –60 °C)	752 °F (400 °C)	
GX [6]	Gunmetal, low ambient temperatures –4 to –76 °F (–20 to –60 °C)	662 °F (350 °C)	
Float (All Ratings at T_{room}) [7]		**Max. $T_{Process}$ [2]**	
Standard			**Standard**
F84	General purpose high/low alarm, 316 SST, min. SG 0.65, 500 psi (34.5 bar)	752 °F (400 °C)	★
F185	General purpose high/low alarm, Alloy 400, min. SG 0.65, 500 psi (34.5 bar)	752 °F (400 °C)	★
F68/1 [8][9]	Horizontal variable differential for pump control/alarm, 316 SST, min. SG 0.72, 500 psi (34.5 bar)	752 °F (400 °C)	★
F68/4 [8][9]	Horizontal variable differential for pump control/alarm, 316 SST, min. SG 0.85, 500 psi (34.5 bar)	752 °F (400 °C)	★
F21/1 [8][9]	Vertical pump control or alarm, 316 SST, rod length 1524 mm, 435 psi (30 bar)	752 °F (400 °C)	★
F21/2 [8][9]	Vertical pump control or alarm, 316 SST, rod length 3048 mm, 435 psi (30 bar)	752 °F (400 °C)	★
F21/3 [8][9]	Vertical pump control or alarm, 316 SST, rod length 4570 mm, 435 psi (30 bar)	752 °F (400 °C)	★
F104/1 [8]	Straight arm, horizontal, 316 SST, rod length 750 mm, 500 psi (34.5 bar)	752 °F (400 °C)	★
F104/2 [8]	Cranked arm, horizontal, 316 SST, dimensions to be specified, 500 psi (34.5 bar)	752 °F (400 °C)	★
F104/3 [8]	Cranked arm, vertical, 316 SST, dimensions to be specified, 500 psi (34.5 bar)	752 °F (400 °C)	★

Table 3. Ordering information for float switches in hazardous areas

★The Standard offering represents the most common options. The starred options (★) should be selected for best delivery.
The Expanded offering is subject to additional delivery lead time.

Expanded			
F96	General purpose high/low alarm, 316 SST, min. SG 0.60, 1073 psi (74 bar)	752 °F (400 °C)	
F98	General purpose high/low alarm, 316 SST, min. SG 0.45, 500 psi (34.5 bar)	752 °F (400 °C)	
F106	General purpose high/low alarm, 316 SST, min. SG 0.51, 1073 psi (74 bar)	752 °F (400 °C)	
F107	General purpose high/low alarm, 316 SST, min. SG 0.71, 2900 psi (200 bar)	752 °F (400 °C)	
F88	Interface duties, 316 SST, min. SG 0.80, 1073 psi (74 bar)	752 °F (400 °C)	
F96	General purpose high/low alarm, 316 SST, min. SG 0.60, 1073 psi (74 bar)	752 °F (400 °C)	
Product Certifications			
Standard			**Standard**
EM (10)	Technical Regulation Customs Union (EAC) Flameproof		★
KN	ATEX / IECEx Flameproof		★
Typical Model Number: S 250 D A F84 KN			

(1) See page 83 for nozzle and stud lengths.
(2) The maximum allowed process temperature is dependent on the Flange (Head), Switch mechanism, Enclosure/Housing, and Float options chosen.
(3) There is no back flange fitted to the S250 and S275 flange (head).
(4) See page 79 for Mobrey flange information.
(5) See "Switch mechanism specifications" on page 77 for information about all switch mechanisms.
(6) The ATEX certification covering –4 to –76 °F (–20 to –60 °C) requires Mechanism Switch code H6 to be selected.
(7) See Table 14 on page 81 for a comparison of the float options listed here.
(8) See pages 83, 84, and 85 for technical float details and length options.
(9) The SIL certificate (code CERT-SIL-L2049 in Table 6 on page 10) is not available with this option.
(10) Contact an Emerson Process Management representative for additional information.

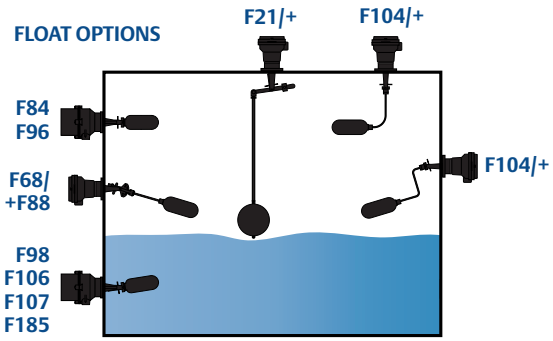

Table 4. Ordering information for float switches in marine applications

★The Standard offering represents the most common options. The starred options (★) should be selected for best delivery.
The Expanded offering is subject to additional delivery lead time.

Model	Product Description		
S	Horizontal Float Switch		
Flange (Head) (1)			
Standard			**Standard**
179	Marine, hoseproof, aluminum bronze wetside, no cable fitted, Mobrey 'A' flange, 261 psi (18 bar)		★
Expanded			
03	Marine, submersible, aluminum bronze wetside, MICC cable fitted, Mobrey 'A' flange, 261 psi (18 bar)		
195	Marine, submersible, aluminum bronze wetside, CSP cable fitted, Mobrey 'A' flange, 261 psi (18 bar)		
163	Marine, submersible, stainless steel wetside, MICC cable fitted, Mobrey 'A' flange, 261 psi (18 bar)		
181	Marine, hoseproof, stainless steel wetside, no cable fitted, Mobrey 'A' flange, 261 psi (18 bar)		
183	Marine, submersible, flameproof, aluminum bronze wetside, CSP cable fitted, Mobrey 'A' flange, 261 psi (18 bar)		
187	Marine, submersible, flameproof, aluminum bronze wetside, MICC cable fitted, Mobrey 'A' flange, 261 psi (18 bar)		
189	Marine, hoseproof, flameproof, aluminum bronze wetside, no cable fitted, Mobrey 'A' flange, 261 psi (18 bar)		
Switch Mechanism (1)(2)		**Max. $T_{Process}$ (1)**	
Standard			**Standard**
D	Electrical: 2 independent Single Pole Single Throw (SPST) contact sets	752 °F (400 °C)	★
P	As type D but with *gold plated contacts*	752 °F (400 °C)	★
Expanded			
D6 (3)	Electrical: 2 independent circuits of Double Pole Double Throw (DPDT) contact sets	752 °F (400 °C)	
P6 (3)	As type D6 but with *gold plated contacts*	752 °F (400 °C)	
Enclosure (1)			
Standard			**Standard**
B	Aluminum bronze – (*code B is required for S179 and S189 models*)		★
BL	Aluminum bronze with 10 ft. (3 m) of fitted cable – (*code BL is required for S03, S195, S183, and S187 models*)		★
S	Stainless steel – (*code S is required for S181 model*)		★
SL	Stainless steel with 10 ft. (3 m) of fitted cable – (*code SL is required for S163 model*)		★
Float (All Ratings at T_{room}) (4)		**Max. $T_{Process}$ (1)**	
Standard			**Standard**
F84	General purpose high/low alarm, 316 SST, min. SG 0.65, 500 psi (34.5 bar)	752 °F (400 °C)	★
F185	General purpose high/low alarm, Alloy 400, min. SG 0.65, 500 psi (34.5 bar)	752 °F (400 °C)	★
F68/1 (5)	Horizontal variable differential for pump control/alarm, 316 SST, min. SG 0.72, 500 psi (34.5 bar)	752 °F (400 °C)	★
F68/4 (5)	Horizontal variable differential for pump control/alarm, 316 SST, min. SG 0.85, 500 psi (34.5 bar)	752 °F (400 °C)	★
F21/1 (5)	Vertical pump control or alarm, 316 SST, rod length 1524 mm, 435 psi (30 bar)	752 °F (400 °C)	★
F21/2 (5)	Vertical pump control or alarm, 316 SST, rod length 3048 mm, 435 psi (30 bar)	752 °F (400 °C)	★
F21/3 (5)	Vertical pump control or alarm, 316 SST, rod length 4570 mm, 435 psi (30 bar)	752 °F (400 °C)	★
F104/1 (5)	Straight arm, horizontal, 316 SST, rod length 750 mm, 500 psi (34.5 bar)	752 °F (400 °C)	★
F104/2 (5)	Cranked arm, horizontal, 316 SST, dimensions to be specified, 500 psi (34.5 bar)	752 °F (400 °C)	★
F104/3 (5)	Cranked arm, vertical, 316 SST, dimensions to be specified, 500 psi (34.5 bar)	752 °F (400 °C)	★
F93 (6)(7)	Shrouded for dirty liquids, 316 SST, min. SG 0.75, atmospheric	356 °F (180 °C)	★
Expanded			
F264	Horizontal limited differential, Alloy 400, min. SG 0.85, 464 psi (32 bar)	752 °F (400 °C)	
Product Certifications			
Standard			**Standard**
EM (8)	Technical Regulation Customs Union (EAC) Flameproof – (*code EM is required for S183, S187, and S189 models*)		★
GM (8)	Technical Regulation Customs Union (EAC) Ordinary Locations Mark – (*code GM is required for S183, S187, and S189 models*)		★
E1	ATEX Flameproof – (*code E1 is required for S183, S187, and S189 models*)		★
NA	No hazardous locations certificates – (*code NA is required for S179, S03, S195, S163, and S181 models*)		★

Table 4. Ordering information for float switches in marine applications

★The Standard offering represents the most common options. The starred options (★) should be selected for best delivery.
The Expanded offering is subject to additional delivery lead time.

Cable Length (required only if a cable is fitted)		
Standard		**Standard**
M03	10 ft. (3 m) of fitted cable	★
Expanded		
M05	15 ft. (5 m) of fitted cable	
M10	30 ft. (10 m) of fitted cable	
M15	45 ft. (15 m) of fitted cable	
M20	60 ft. (20 m) of fitted cable	
M30	90 ft. (30 m) of fitted cable	
Typical Model Number: S 03 D BL F84 NA / M03		

(1) The maximum process temperature is dependent on the flange (head), switch mechanism, cable (if fitted), and float options chosen. See Table 5 on page 70 for the IP rating and maximum process temperature.
(2) See "Switch mechanism specifications" on page 77 for information about all switch mechanisms.
(3) Not available for stainless steel enclosure and wetside models S163 and S181.
(4) See Table 14 on page 81 for a detailed comparison of the float types listed here.
(5) Refer to pages 83, 84, and 85 for technical float details and length options. See "Nozzle and stud lengths" on page 83 for stud lengths.
(6) A silicone rubber gaiter is supplied with the 316 SST shroud
(7) Shrouded floats for stainless steel switches S163 and S181 are available on request (contact an Emerson Process Management representative for information).
(8) Contact an Emerson Process Management representative for additional information.

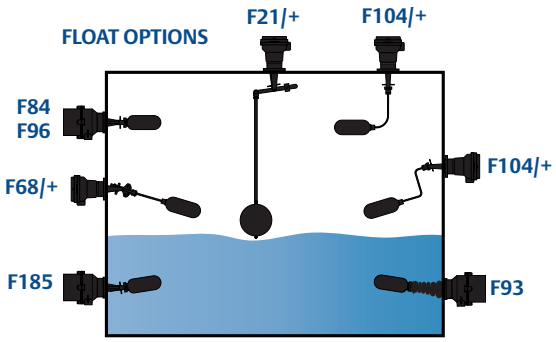

Table 5. Switch types comparison – *marine applications*

Type Number	Maximum $T_{Process}$ (1)		Head IP Rating	Cable (2)
	Submersed	Non-submersed		
S03	176 °F (80 °C)	410 °F (210 °C)	66/68 (100 ft. / 30 m)	MICC
S179	212 °F (100 °C)	410 °F (210 °C)	66 (3)	*None fitted*
S195	122 °F (50 °C)	410 °F (210 °C)	66/68 (100 ft. / 30 m)	CSP
S163	176 °F (80 °C)	410 °F (210 °C)	66/68 (100 ft. / 30 m)	MICC
S183	122 °F (50 °C)	410 °F (210 °C)	66/68 (100 ft. / 30 m)	CSP
S181	212 °F (100 °C)	410 °F (210 °C)	66 (3)	*None fitted*
S187	122 °F (50 °C) (4)	410 °F (210 °C)	66/68 (100 ft. / 30 m)	MICC
S189	140 °F (60 °C)	410 °F (210 °C)	66 (5)	*None fitted*

(1) The maximum process temperature is dependent on the Flange (Head), Switch mechanism, and Float options chosen.
(2) See page 76 for cable specification.
(3) S179 and S181 may be submersed to 100 ft. (30 m) head of water with temperatures between 34 and 212 °F (1 and 100 °C). Fitting and testing of customer supplied cable and cable gland is the customer's responsibility. The cable and cable gland may limit the temperature further.
(4) The maximum process temperature for submersed S187 is 176 °F/80 °C (for non-approved) or 122 °F/50 °C (for ATEX approved).
(5) S189 may be submersed to 100 ft. (30 m) head of water with temperatures between 34 and 140 °F (1 and 60 °C). Fitting and testing of customer supplied cable and cable gland is the customer's responsibility. The cable and cable gland may limit the temperature further.

Ordering SIL Certificate and Accessories

Table 6. Ordering information for SIL certificate and accessories

SIL certificate and accessories	Note: See page 79 for dimensions of Mobrey flanges	
Standard		**Standard**
CERT-SIL-L2049 (1)	SIL Certificate	★
TD 110/A	316 stainless steel test device for Mobrey 'A' flanged switches, sandwich (see Figure 1 on page 71)	★
TD 111/A	Carbon steel test device for Mobrey 'A' flanged switches, weld on (see Figure 1 on page 71)	★
Expanded		
71020/107	316 stainless steel welding pad for Mobrey 'A' flanged switches (see Figure 2 on page 72)	
J184	Carbon steel welding pad for Mobrey 'A' flanged switches (see Figure 2 on page 72)	
J786	Carbon steel welding nozzle for Mobrey 'A' flanged switches (see Figure 2 on page 72)	
71030/900	316 stainless steel backing flange for Mobrey 'A' flanged switches (see Figure 2 on page 72)	
J863	Carbon steel backing flange for Mobrey 'A' flanged switches (see Figure 2 on page 72)	
J800	Carbon steel welding pad for Mobrey 'G' flanged switches (see Figure 3 on page 72)	
71020/111	316 stainless steel welding pad for Mobrey 'G' flanged switches (see Figure 3 on page 72)	
J799	Carbon steel welding nozzle for Mobrey 'G' flanged switches (see Figure 3 on page 72)	

(1) Not available with float switches for marine applications, models with pneumatic switch mechanism and some float options. See M310/FSM for full details.

Test devices

Figure 1. Test devices for Mobrey 'A' flanged switches

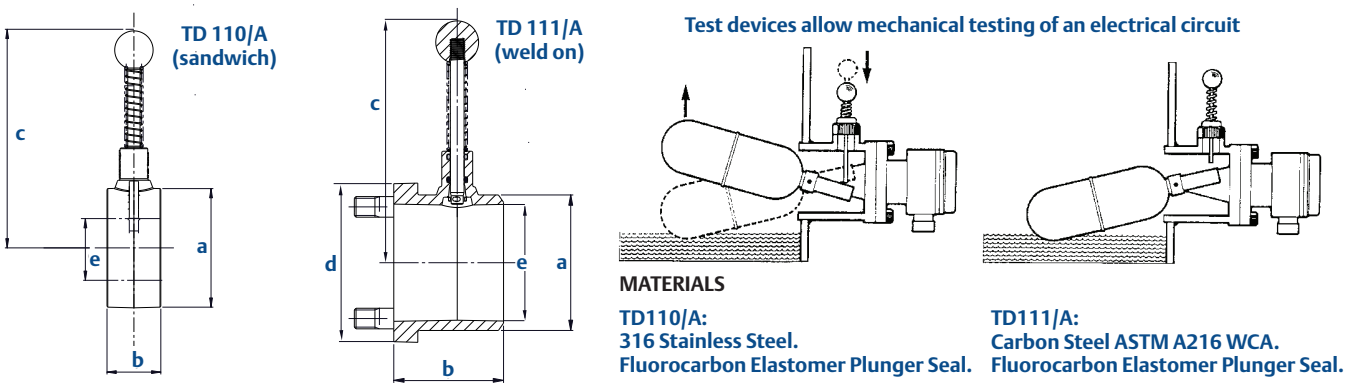

Table 7. Test device specifications and dimensions

Type	Vessel Flange	Maximum Pressure(1)	Maximum $T_{Process}$	øa in. (mm)	øb in. (mm)	øc in. (mm)	d^2 in. (mm)	øe in. (mm)
TD 110/A	Mobrey 'A'	261 psi (18 bar)	410 °F (210 °C)	3.02 (77)	1.38 (35)	5.59 (142)	N/A	2.64 (67)
TD 111/A	Weld on	261 psi (18 bar)	410 °F (210 °C)	3.11 (79)	2.52 (64)	5.59 (142)	3.62[2] (92[2])	2.64 (67)

(1) 182 psi (12.6 bar) at maximum temperature of 410 °F (210 °C).

Float chambers

Float chambers are used to facilitate the external mounting of the float switch onto a tank or pressure vessel, particularly where space inside the vessel is restricted or where the control must be isolated for routine maintenance whilst the plant is in operation.

A wide range of **cast** or **fabricated** chambers is available. Exotic materials are also available.

Process connections may be specified as top-and-bottom or side-and-side, and can be flanged, screwed or butt welded in a choice of sizes to suit most plant installations.

Please contact Rosemount Measurement for further information.

Fabricated chamber

Cast chamber

Companion flanges

Figure 2. Companion flanges for Mobrey 'A' flanged switches

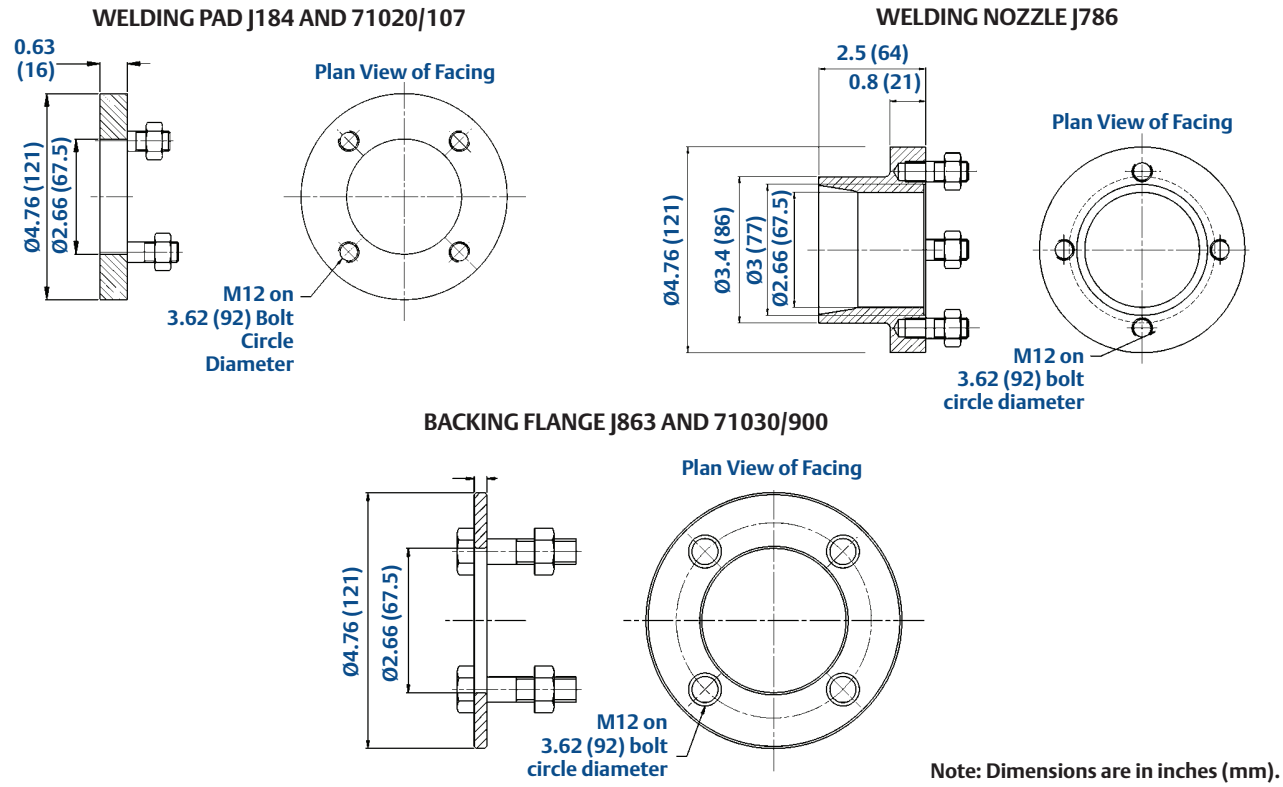

Note: Dimensions are in inches (mm).

Figure 3. Companion flanges for Mobrey 'G' flanged float switches

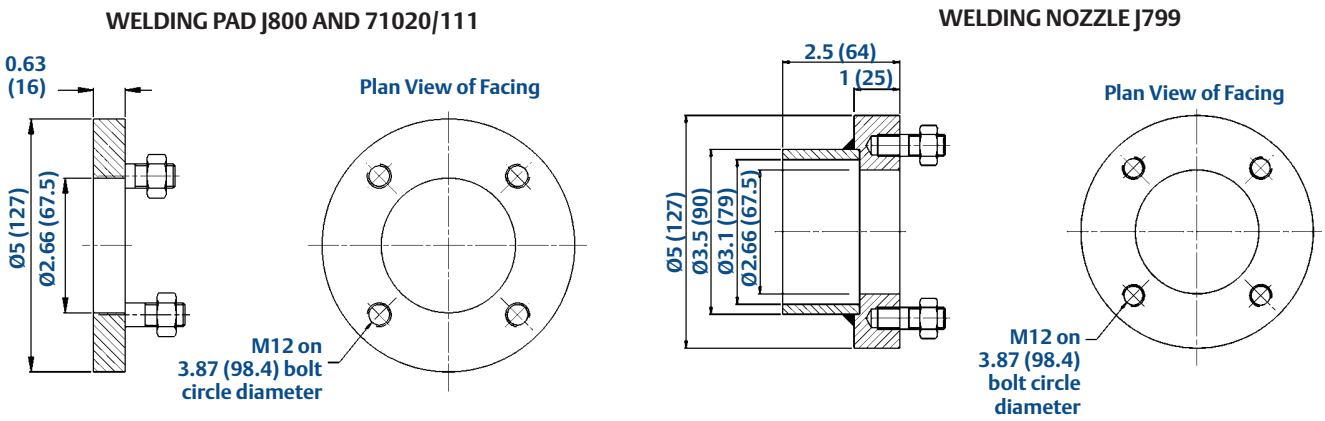

Note: Dimensions are in inches (mm).

Note

- Backing flange J863 is zinc plated and passivated
- Welding types supplied complete with studs and nuts
- Backing type supplied complete with bolts, sealing washers, and full face gasket
- Other materials available upon request

Product Selection
Contents

Specifications

Material selection

Emerson provides a variety of products with various product options and configurations including materials of construction that can be expected to perform well in a wide range of applications. The product information presented is intended as a guide for the purchaser to make an appropriate selection for the application. It is the purchaser's sole responsibility to make a careful analysis of all process parameters (such as all chemical components, temperature, pressure, flow rate, abrasives, contaminants, etc.), when specifying product, materials, options and components for the particular application. Emerson Process Management is not in a position to evaluate or guarantee the compatibility of the process fluid or other process parameters with the product, options, configuration or materials of construction selected.

Float switch specifications

Table 8. Float switch specification – general applications (aluminum bronze wetside)

Electrical Models	
Enclosure and Wetside	Aluminum bronze to BS1400 – AB1 maximum iron content 2.5%
IP Rating	Weatherproof to IEC60529 (IP66)
End Cap	Short (4 contacts) e.g. S01DB, Aluminum to BS1490 – grade LM24
	Long (6 contacts) e.g. S01D6B, Brass to BS1400 – DCB3
Cable Gland	Nickel-plated brass gland with a fully insulated polychloroprene-nitrile rubber CR/NBR gasket seal. Clamping range for 8 to 13 mm OD cable
	Maximum ambient temperature is 176 °F (80 °C)
Maximum Process Temperature	410 °F (210 °C). *If shrouded float F93 used, maximum is 356 °F (180 °C)*
Gasket Material	Non-asbestos sheet material gaskets to BS 7531 Grade X, which has upper temperature limits of 482 °F (250 °C) for gas, vapor, and steam, and 824 °F (440 °C) for liquids
Dimensions	See page 79 for dimensional drawings
Air Pilot Valve Models	
Enclosure	Aluminum Alloy to BS 1490: Grade LM24
Valve Block	Aluminum Alloy to BS 1490: Grade LM25
Finish	All external aluminum surfaces are chromate phosphate treated, and then externally painted
Maximum Process Temperature	410 °F (210 °C). *If shrouded float F93 used, maximum is 356 °F (180 °C)*
Gasket Material	Non-asbestos sheet material gaskets to BS 7531 Grade X, which has upper temperature limits of 482 °F (250 °C) for gas, vapor, and steam, and 824 °F (440 °C) for liquids
Dimensions	See page 79 for dimensional drawings
Approvals(1)	
UK	Lloyds Register of Shipping (LRS)
Germany	Germanischer Lloyd
Canada	CSA (Special order, contact factory)
USA	ABS
France	BV
Italy	RINA
Russia	RMRS
	Technical Regulation Customs Union (EAC) Ordinary Location Mark
Norway	DNV

(1) Other approvals may be available. Please contact an Emerson Process Management representative for additional information.

Table 9. Float switch specification – general purpose applications (stainless steel wetside)

Electrical Models	
Enclosure Housing Material	Aluminum alloy to BS 1490: Grade LM24
IP Rating	Weatherproof to IEC60529 (IP66)
Wetside material	316 Stainless steel (to Mobrey Standard) 316S33 Stainless steel for S489 and S490 switch types
Back Flange (*Excludes S36 and S190*)	Carbon steel to BS 1501: 224 Grade 430B LT50
	This material has guaranteed properties at high 752 °F (400 °C) and low –58 °F (–50 °C) temperatures
Cable Gland	Nickel-plated brass gland with a fully insulated polychloroprene-nitrile rubber CR/NBR gasket seal. Clamping range for 8 to 13 mm OD cable
	Maximum ambient temperature is 176 °F (80 °C)
Maximum Process Temperature	Dependent upon Flange (Head), Switch mechanism, and Float options chosen(1). Note: See "Gasket Material" below for gasket temperature limits
Gasket Material	Float switches with AMSE B16.5 Class 600, Class 900, or EN 1092-1 PN 63 flanges are fitted with spiral wound non-asbestos filled gaskets rated to 752 °F (400 °C)
	Otherwise non-asbestos sheet material gaskets to BS 7531 Grade X, which has upper temperature limits of 482 °F (250 °C) for gas, vapor, and steam, and 824 °F (440 °C) for liquids. If the switch experiences gas vapor or steam temperatures above 482 °F (250 °C), then a suitable alternative gasket must be fitted
Dimensions	See page 80 for dimensional drawings
Air Pilot Valve Models	
Enclosure	Aluminum Alloy to BS 1490: Grade LM24
Valve Block	Aluminum Alloy to BS 1490: Grade LM25
Finish	All external aluminum surfaces are chromate phosphate treated, and then externally painted
Maximum Process Temperature	Dependent upon Flange (Head), Switch mechanism, and Float options chosen(1). Note: See "Gasket Material" below for gasket temperature limits
Connection	Brass compression couplings to suit 0.24 in. (6 mm) copper or nylon pipe (coupling thread 1/4-in BSP)
Gasket Material	Float switches with AMSE B16.5 Class 600, Class 900, or EN 1092-1 PN 63 flanges are fitted with spiral wound non-asbestos filled gaskets rated to 752 °F (400 °C)
	Otherwise non-asbestos sheet material gaskets to BS 7531 Grade X, which has upper temperature limits of 482 °F (250 °C) for gas, vapor, and steam, and 824 °F (440 °C) for liquids. If the switch experiences gas vapor or steam temperatures above 482 °F (250 °C), then a suitable alternative gasket must be fitted
Dimensions	See page 80 for dimensional drawings
Approvals(2)	
UK	Lloyds Register of Shipping (LRS)
Germany	Germanischer Lloyd
Canada	CSA (Special order, contact factory)
USA	ABS
Russia	RMRS
	Technical Regulation Customs Union (EAC) Ordinary Location Mark
Norway	DNV

(1) See Table 2 on page 65 for maximum process temperature ratings of these options.

(2) Other approvals may be available. Please contact an Emerson Process Management representative for additional information.

Table 10. Float switch specification – hazardous area applications

General	
Enclosure/Housing Materials	Aluminum Alloy to BS 1490: Grade LM24 All external aluminum surfaces are chromate phosphate treated, and then externally stove painted
	Gunmetal to BS1400: LG2 Natural finish
IP Rating	Weatherproof to IEC60529 (IP66)
Wetside Material	316 Stainless steel to Mobrey Standard (316S33 Stainless steel for S260 and S261 switches)
	Gunmetal to BS1400: LG2
Back Flange (*Excludes S250 and S275*)	Carbon steel to BS 1501: 224 Grade 430B LT50
	This material has guaranteed properties at high (752 °F/400 °C) and low (–58 °F/–50 °C) temperatures
Maximum Process Temperatures	Aluminum enclosure: 752 °F (400 °C); Gunmetal enclosure: 662 °F (350 °C) Note: See "Gasket Material" below for gasket temperature limits
	S275: 392 °F (200 °C)
Gasket Material	Float switches with AMSE B16.5 Class 600, Class 900, or EN 1092-1 PN 63 flanges are fitted with spiral wound non-asbestos filled gaskets rated to 752 °F (400 °C)
	Otherwise non-asbestos sheet material gaskets to BS 7531 Grade X, which has upper temperature limits of 482 °F (250 °C) for gas, vapor, and steam, and 440 °C for liquids. If the switch experiences gas vapor or steam temperatures above 482 °F (250 °C), then a suitable alternative gasket must be fitted
Ambient Temperatures Below 0 °C	(i) Down to –4 °F (–20 °C) Standard enclosure/housing codes A or G are suitable
	(ii) Down to –76 °F (–60 °C) Specify Enclosure/Housing order codes "AX" or "GX" which are as standard but with ATEX certification to use down to –76 °F (–60 °C). Note: This is downrated to –58 °F (–50 °C) unless a Mobrey 'G' flange is fitted or low temperature back flange is specified
Dimensions	See page 81 for dimensional drawings
Approvals(1)	
ATEX	II 1/2 G, Exd IIC T6 (Ta = –20 °C to 60 °C) Housing code AX or GX II 1/2 G, Ex d IIC T6 (Ta = –60 °C to 60 °C)
IECEx	Ex d IIC T6 (Ta = –20 °C to 60 °C) Housing code AX or GX, Ex d IIC T6 (Ta = –60 °C to 60 °C)
CSA(2)	Canadian Standards Association, Class 1: Group CD
EAC	Technical Regulation Customs Union (EAC) Flameproof Certificate: RU C-GB.ГБ06.B.00078 Flameproof: 1Exd IIC T6X Ta (see table in the certificate)
LRS	Lloyds Register of Shipping

(1) Other approvals may be available. Please contact an Emerson Process Management representative for additional information.

(2) CSA certified products are available to special order.

Table 11. Float switch specification – marine applications

Aluminum Bronze Wetside Models	
Enclosure and Wetside	Aluminum bronze to BS1400 – AB1 maximum iron content 2.5%
IP Rating	May be submerged to 100 ft. (30 m) head of water (IP68)
End Cap	Brass BS1400 DCB3 (non-hazardous area float switches)
	Aluminum Bronze BS400 AB, maximum 2.5% iron (hazardous area float switches)
Maximum Process Temperature	See Table 5 on page 70
Gasket Material	Non-asbestos sheet material gaskets to BS 7531 Grade X, which has upper temperature limits of 482 °F (250 °C) for gas, vapor, and steam, and 824 °F (440 °C) for liquids. If the switch experiences gas vapor or steam temperatures above 482 °F (250 °C), then a suitable alternative gasket must be fitted
Dimensions	See page 82 for dimensional drawings
Stainless Steel Wetside Models	
Enclosure and Wetside	Type 316 Stainless steel
IP Rating	May be submerged to 100 ft. (30 m) head of water (IP68)
End Cap	Aluminum bronze to BS1400 – AB1/C
Maximum Process Temperature	410 °F (210 °C) Note: See “Gasket Material” and “Cable” below for further temperature limits
Cable Gland(1)	Nickel-plated brass gland with a fully insulated polychloroprene-nitrile rubber CR/NBR gasket seal. Clamping range for 8 to 13 mm OD cable
	Maximum ambient temperature is 176 °F (80 °C)
Gasket Material	Non-asbestos sheet material gaskets to BS 7531 Grade X, which has upper temperature limits of 482 °F (250 °C) for gas, vapor, and steam, and 824 °F (440 °C) for liquids. If the switch experiences gas vapor or steam temperatures above 482 °F (250 °C), then a suitable alternative gasket must be fitted
Dimensions	See page 82 for dimensional drawings
Cable(2)	
MICC	Maximum Process Temperature limit: 176 °F (80 °C). 600V light duty grade mineral insulated copper clad cable
CSP	Maximum Process Temperature limit: 122 °F (50 °C). 600V/1000V grade ethylene-propylene rubber insulated flexible cable
Hazardous Area Approvals(3)	
ATEX	II 2 G, Ex d IIC Gb T6 (Ta= –20 °C to 60 °C) when submersed, in a vented tank application
	II 1/2 G, Ex d IIC Ga/Gb T6 (Ta= –20 °C to 60 °C) when enclosure is outside in a tank mounted application
Approvals(4)	
UK	Lloyds Register of Shipping
Germany	Germanischer Lloyd
USA	ABS
France	BV
Italy	RINA
Russia	RMRS
	Technical Regulation Customs Union (EAC) Flameproof and Ordinary Location Mark
Norway	DNV

(1) For S179 only, cable gland is supplied loose in the box. Fitting of the gland is the customer's responsibility. Types S03, S195, S163, S183, and S187 are supplied with a pre-fitted cable gland.

(2) See Table 5 on page 70 for marine application switches supplied with a fitted cable.

(3) Types S183, S187, and S189 only.

(4) Other approvals may be available. Please contact an Emerson Process Management representative for additional information.

Switch mechanism specifications

Electrical Types D and P

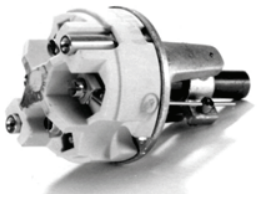

Electrical Types D6 and P6

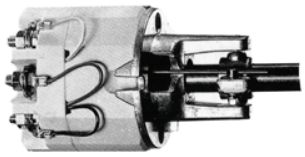

Electrical Types H6 and B6

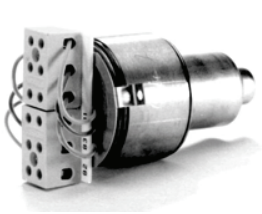

Pneumatic Types AP and AM

Electrical switch mechanisms

Type D

- For alternative make and break circuits
- Function: 2 independent single pole single throw contact sets and “Snap-Action”
- May be wired S.P.C.O. on site

Type D6

- For switching two independent circuits.
- Function: Double pole change over (2 independent circuits) and “Snap-Action”

Types P and P6

- As types D and D6, but with gold-plated contacts for switching low power (e.g. intrinsically safe) electrical circuits

Type H6

- For use in corrosive area and/or low temperature applications
- As type D6, but with gold-plated contacts and all moving parts are housed in an inert gas-filled hermetically sealed enclosure

Type B6

- For use in Zone 2 Hazardous Areas
- As type H6, but coded ATEX II 3 G, EExnC IIC T6 –76 °F (–60 °C) <Ta < 140 °F (60 °C)
- For Technical Regulation Customs Union (EAC) approvals, contact an Emerson Process Management representative for the latest information

Pneumatic switch mechanisms

Type AP

- For switching air circuits
- Function: Change over
- Air pressure:

  Max. air pressure through valve: 100 psi (7 bar).

  Max. air flow through valve: 66 litres/minute at 100 psi (7 bar). Air must be clean and dry
- Nominal leakage rate of 0.2%
- Connections: Brass compression couplings to suit 0.24-in. (6 mm) copper or nylon pipe, coupling thread ¼-in. BSP.

Type AM

Types D and P

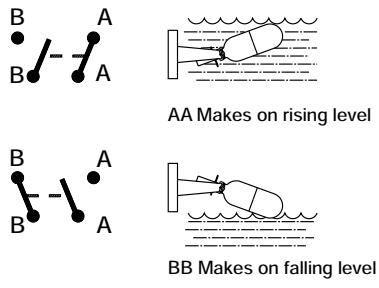

Types D6, P6, H6, and B6

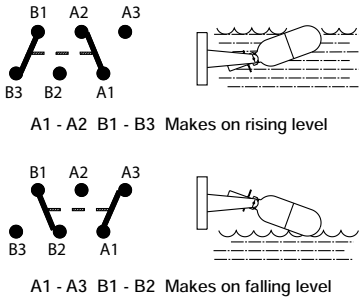

Type AP and AM

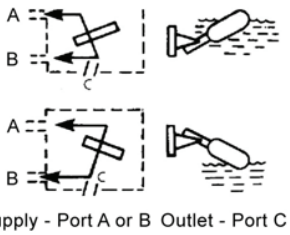

Glandless magnetic snap-action switching

A-A makes contact on rising level

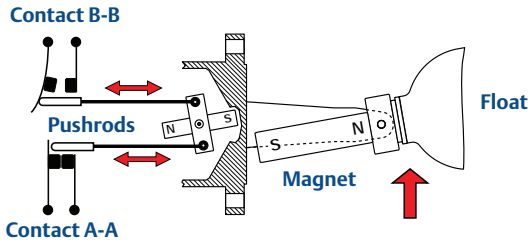

B-B makes contact on falling level

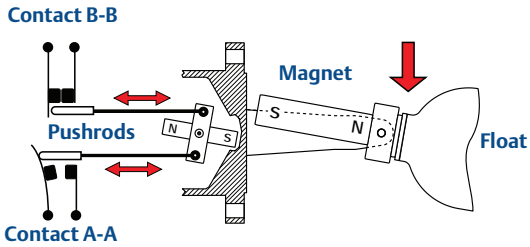

Table 12. Electrical switch mechanisms

Electrical Switch Specification	D and D6	P and P6	H6 and B6
Contact Material	Fine Silver	Gold Plated	Gold Plated
Process Temperature	–22 to 752 °F (–30 to 400 °C)	–22 to 752 °F (–30 to 400 °C)	–148 to 482 °F (–100 to 250 °C)
Ambient Temperature	–22 to 158 °F (–30 to 70 °C)	–22 to 158 °F (–30 to 70 °C)	–76 to 158 °F (–60 to 70 °C)
Insulation Value	(live to earth) > 100 MEG OHM		
Terminals	D and P: M4 screws with non-rotational clamp plates.		
	D6, P6, H6, and B6: 6-way terminal block with pressure plates		
Electrical Specification	**AC**	**DC Inductive**	**DC Resistive**
Maximum Voltage V	440	240	240
Maximum Current A	5.0 (1)	1.0	2.0
Maximum Power	2000VA	35 Watts	70 Watts
	Power Factor 0.4 Minimum	Time Constant 40 ms Maximum	

(1) Maximum current for Type D is 8 A up to 410 °F (210 °C).

Warning

- The plating of gold contacts may be permanently damaged when used to switch circuits above the following limits:
  300 V: 12 mA Resistive
  24 V: 2 mH/200 mA Inductive
  24 V: 250 mA Resistive
  24 V: 750 mH/10 mA Inductive

Note

- LVD (Low Voltage Directive) standards applied: EN60947 Parts 1 and 5.1

Dimensional Drawings

Mobrey 'A' and 'G' flanges

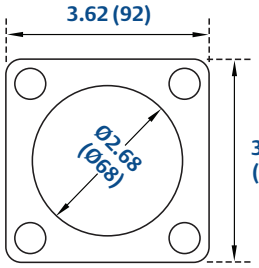

Mobrey 'A' flange:
4 off Ø0.55 (Ø14) holes
equi-spaced on 3.62 (92) PCD

Note: Dimensions are in inches (mm).

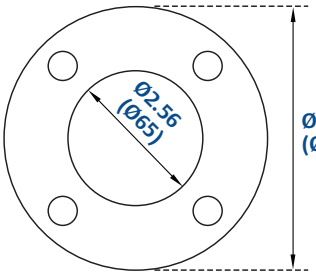

Mobrey 'G' flange:
4 off Ø0.55 (Ø14) holes
equi-spaced on 3.97 (98.4) PCD

General purpose float switches (aluminum bronze wetside)

Switch Mechanism Types DB and PB

Note: See Table 13 for dimensions X, Y, and Z.

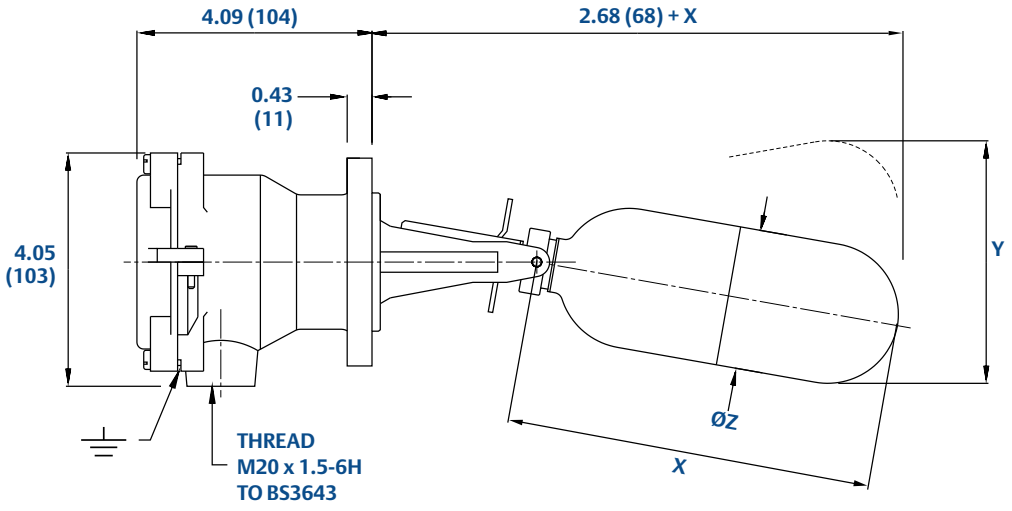

Switch Mechanism Types D6B and P6B

Note: See Table 13 for dimensions X, Y, and Z.

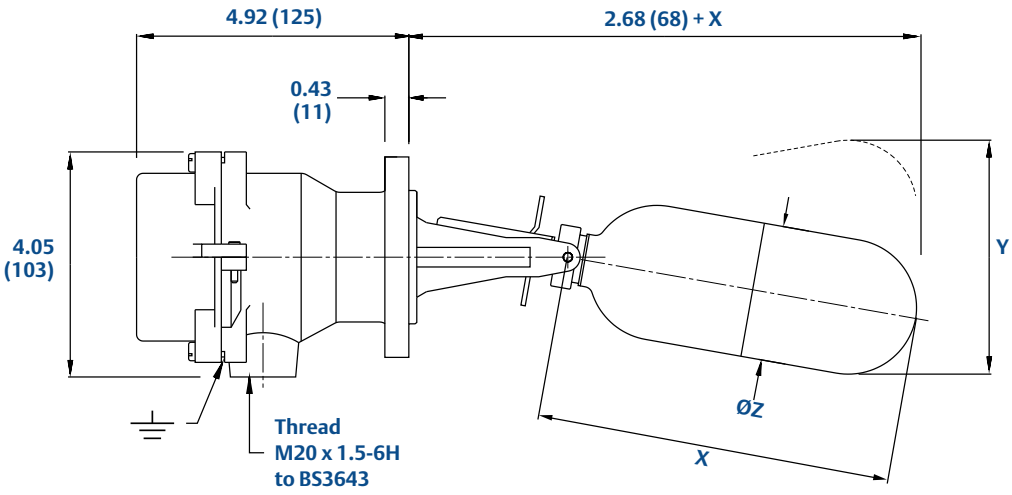

Note: Dimensions are in inches (mm).

General purpose float switches (stainless steel wetside)

Note: Dimensions are in inches (mm).

Note: See Table 13 for dimensions X, Y, and Z.

MOBREY FLANGE

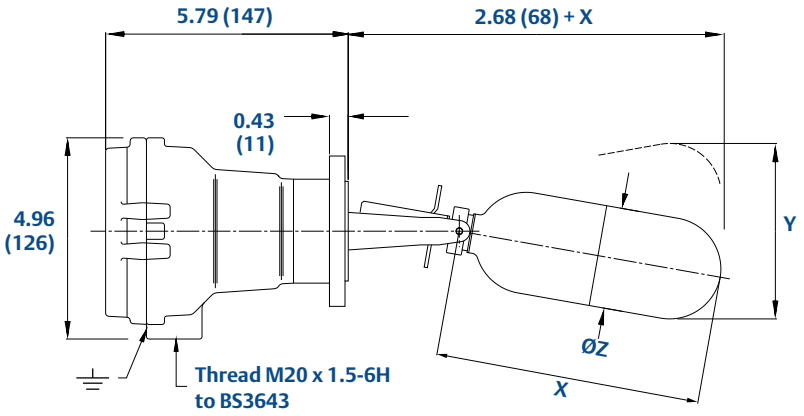

S36* and S190*

ASME B16.5 / EN1092-1 FLANGE

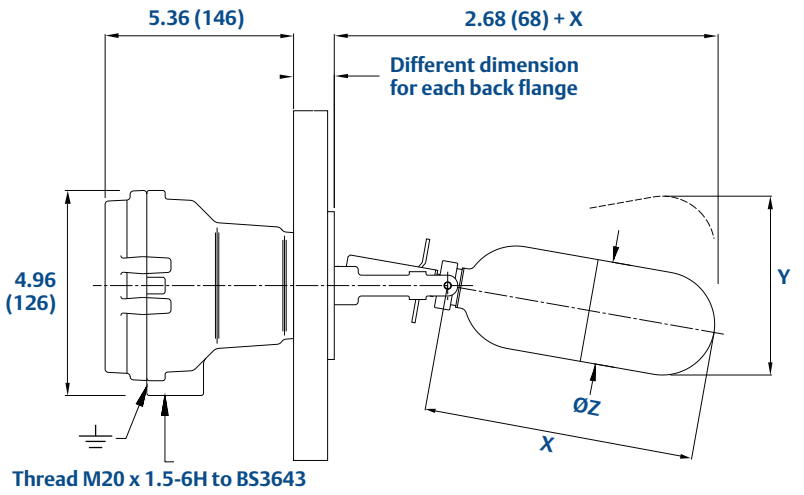

S4*

Table 13. Float dimensions X, Y, and Z – *general purpose float switches*

Float Type	Minimum S.G.	Max. P@T_{Room} PSI (Bar)	Max. $T_{Process}$ °F (°C)	Differential in. (mm)	Dimension X in. (mm)	Dimension Y in. (mm)	Dimension øZ in. (mm)	Float Material
F84	0.65	500 (34.5)	752 (400)	0.51 (13)	6.45 (164)	4.68 (119)	2.56 (65)	316 SST
F96	0.60	1073 (74)	752 (400)	0.51 (13)	6.45 (164)	4.68 (119)	2.56 (65)	316 SST
F98	0.45	500 (34.5)	752 (400)	0.55 (14)	7.24 (184)	5.00 (127)	2.56 (65)	316 SST
F106	0.51	1073 (74)	752 (400)	0.51 (13)	7.28 (185)	4.25 (108)	2.56 (65)	316 SST
F107	0.71	2900 (200)	752 (400)	0.51 (13)	6.77 (172)	4.72 (120)	2.56 (65)	316 SST
F68/+(1)	0.72 to 0.85	500 (34.5)	752 (400)	*Variable (See page 83)*			2.56 (65)	316 SST
F21/+(1)	0.70	435 (30)	752 (400)	*Variable (See page 84)*			5.08 (129)	316 SST
F104/+(1)	*Various*	500 (34.5)	752 (400)	*As Ordered (See page 85)*			2.56 (65)	316 SST
F88	0.8/1.0	1073 (74)	752 (400)	1.02 (26)	14.13 (359)	7.79 (198)	2.56 (65)	316 SST
F93	0.75	Atmospheric	356 (180)	0.51 (13)	7.20 (183)	4.88 (124)	2.56 (65)	316 SST
F185	0.67	500 (34.5)	752 (400)	0.51 (13)	6.45 (164)	4.68 (119)	2.56 (65)	Alloy 400

(1) Refer to pages 83, 84, and 85 for technical float details and length options. See "Nozzle and stud lengths" on page 83 for stud lengths.

Hazardous area float switches

Note: Dimensions are in inches (mm).

Note: See Table 14 for dimensions X, Y, and Z.

MOBREY FLANGE

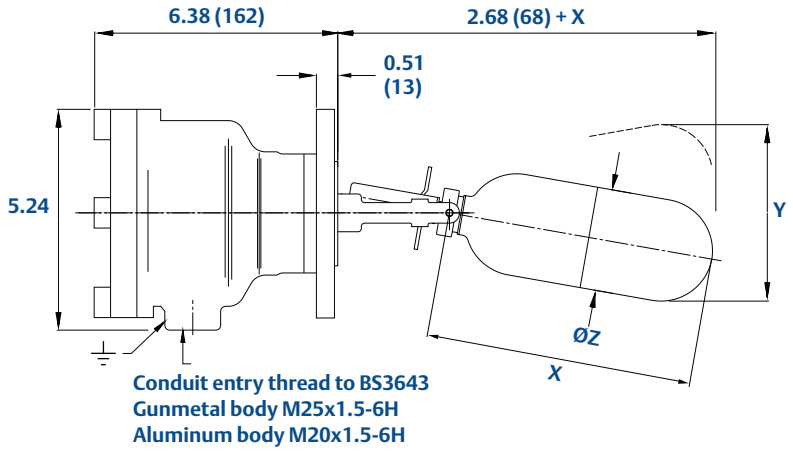

ASME B16.5 / EN1092-1 FLANGE

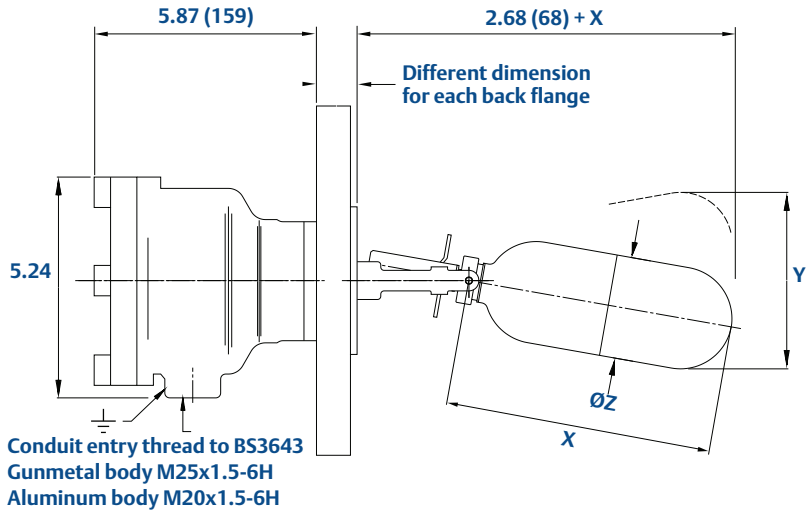

Table 14. Float dimensions X, Y, and Z – *hazardous area and marine float switches*

Float Type	Minimum S.G.	Max. P@T_{Room} PSI (Bar)	Max. $T_{Process}$ °F (°C)	Differential in. (mm)	Dimension X in. (mm)	Dimension Y in. (mm)	Dimension ØZ in.(mm)	Float Material
F84	0.65	500 (34.5)	752 (400)	0.51 (13)	6.45 (164)	4.68 (119)	2.56 (65)	316 SST
F98	0.45	500 (34.5)	752 (400)	0.55 (14)	7.24 (184)	5.00 (127)	2.56 (65)	316 SST
F106	0.51	1073 (74)	752 (400)	0.51 (13)	7.28 (185)	4.25 (108)	2.56 (65)	316 SST
F107	0.71	2900 (200)	752 (400)	0.51 (13)	6.77 (172)	4.72 (120)	2.56 (65)	316 SST
F68/+(1)	0.72 to 0.85	500 (34.5)	752 (400)	*Variable (See page 83)*			2.56 (65)	316 SST
F21/+(1)	0.70	435 (30)	752 (400)	*Variable (See page 84)*			5.08 (129)	316 SST
F104/+(1)	*Various*	500 (34.5)	752 (400)	*As Ordered (See page 85)*			2.56 (65)	316 SST
F88	0.8/1.0	1073 (74)	752 (400)	1.02 (26)	14.13 (359)	7.79 (198)	2.56 (65)	316 SST
F93	0.75	Atmospheric	356 (180)	0.51 (13)	7.20 (183)	4.88 (124)	2.56 (65)	316 SST
F185	0.67	500 (34.5)	752 (400)	0.51 (13)	6.45 (164)	4.68 (119)	2.56 (65)	Alloy 400
F264	0.85	464 (32.0)	752 (400)	0.9 (23)/1.14 (29)/1.3 (33)	7.05 (179)	*Variable*	2.5 (63.5)	Alloy 400

(1) Refer to pages 83, 84, and 85 for technical float details and length options. See "Nozzle and stud lengths" on page 83 for stud lengths.

Marine float switches

Note: See Table 14 on page 81 for dimensions X, Y, and Z.

Note: Dimensions are in inches (mm).

ALUMINUM BRONZE WETSIDE

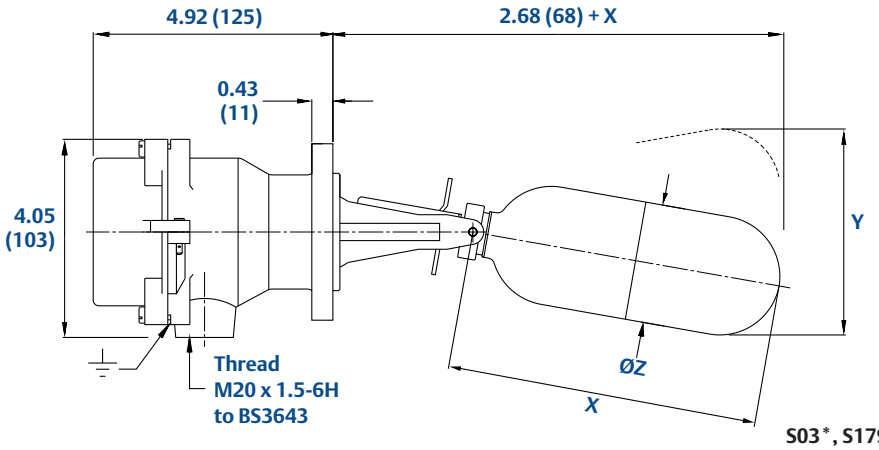

S03*, S179*, and S195*

STAINLESS STEEL WETSIDE

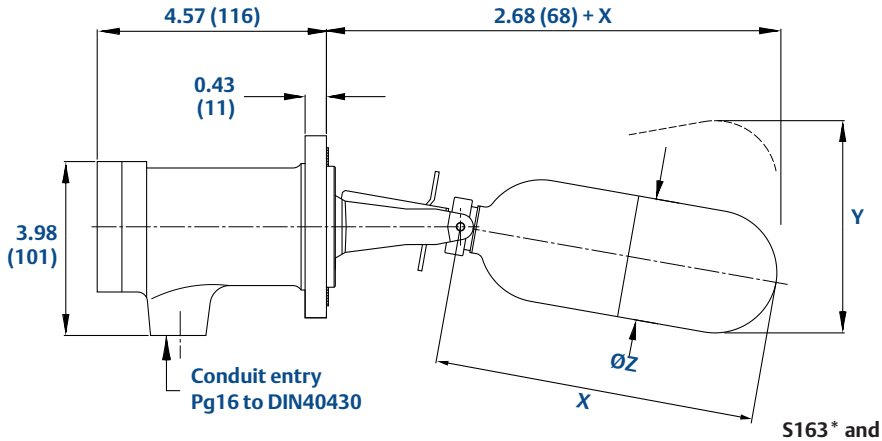

S163* and S181*

HAZARDOUS SUBMERSIBLE / HOSEPROOF

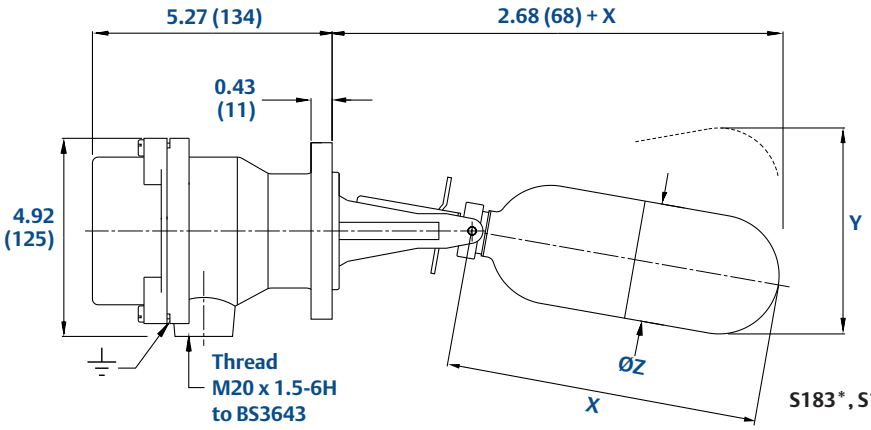

S183*, S187*, and S189*

Nozzle and stud lengths

Table 15. Maximum length in mm (dimension L)

	F68/*	F84	F185	F88	F93	F96	F98	F107	F106	F264
Mobrey A	65	75	75	135	75	75	90	-	92	75
DN65	65	75	75	135	-	75	90	-	92	75
DN80	70	80	80	170	-	75	90	-	98	90
DN100	95	105	105	200	-	105	105	-	110	100
DN125	105	140	140	200	-	140	140	-	140	140
DN150	224	180	180	200	-	180	170	-	200	190
3 in. 300/150	70	80	80	170	-	80	90	-	98	90
4 in. 300/150	95	105	105	200	-	105	105	-	110	100
3 in. 600	62	70	70	130	-	70	85	80	89	70
3 in. 900	-	-	-	-	-	70	-	80	-	-
Mobrey A	65	75	75	135	-	75	90	-	92	75
6 in. 150	224	180	180	200	-	180	170	-	200	190

Note
See Table 6 on page 71 for companion flanges and accessories.

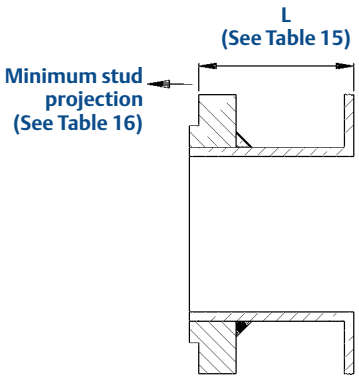

Table 16. Minimum stud projection (in mm)

Rating	G	A	PN 16					PN 40					PN 63				150		300		600	900
Size	-	-	65	80	100	125	150	65	80	100	125	150	80	100	125	150	3 in.	4 in.	3 in.	4 in.	3 in.	3 in.
Stud	35	30	40	40	40	40	44	42	42	46	52	54	52	55	62	67	46	46	54	56	64	73

Horizontal F68 pump control and alarm float

Note: Dimensions are in inches (mm).

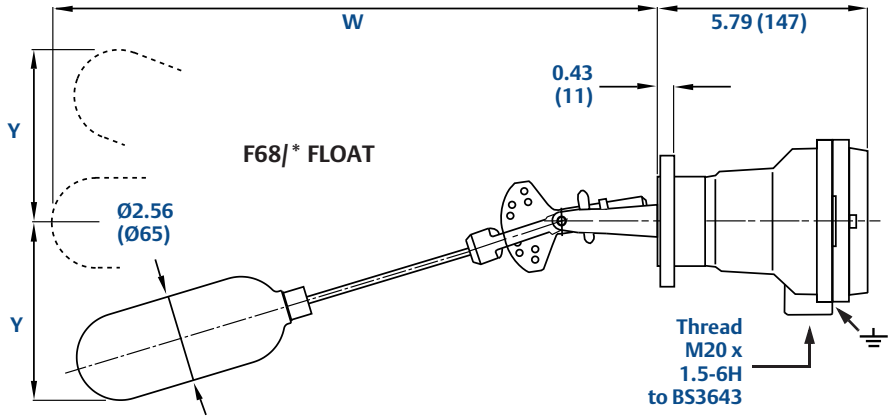

Note

- Switches fitted with the F68/+ type float may be adjusted on site to meet pump control differentials. The float is available as F68/1 or F68/4. The F68/4 has pre-drilled holes along the rod to allow the user to achieve the /2 and /3 differentials in Table 17.
- Full details of the operating levels and differentials are in the product manual (Document Number M310).

Table 17. Dimensions and specifications for F68/*

Maximum Intrusions(1)	F68/1	F68/2	F68/3	F68/4
Wetside in. (mm) 'W'	14.2 (360)	18.5 (470)	23.2 (590)	25.3 (643)
Minimum tank dimension above/below centre line (mm) 'Y'	8.5 (216)	11.5 (292)	14.5 (368)	16.0 (406)
Minimum Specific Gravity (S.G.)	0.72	0.8	0.82	0.85
Maximum differential (mm)	9.72 (247)	14.2 (360)	19.0 (483)	21.9 (555)

(1) These dimensions in inches (mm) are approximate for cold water and will vary for liquids with a different specific gravity (SG.)

Vertical F21 pump control and alarm float

Note: See Table 18 for dimensions S and T.

F21/* FLOAT

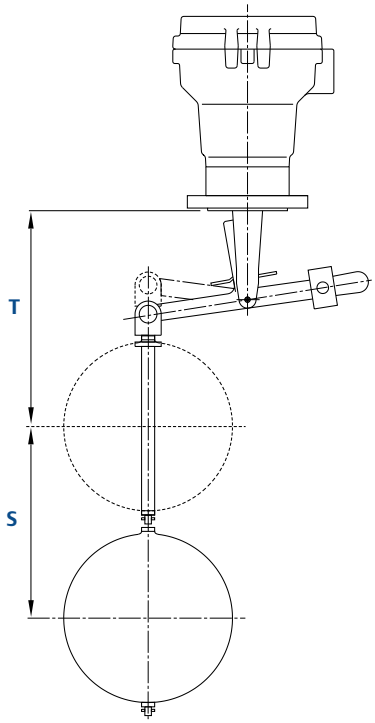

Note

- Float assembly must be fitted from inside if for use in a vessel, or complete switch and float assembly may be mounted on a suitable bracket or manhole cover.

Float rod lengths available:

F21/1 5 ft. (1524 mm)

F21/2 10 ft. (3048 mm)

F21/3 15 ft. (4570 mm) maximum

Float roads may be cut to length on site and switches set to operate at required level in either pump control or alarm mode by following the supplied setting instructions.

Table 18. Dimensions S and T for F21/+

Pump Differential 'S' in. (mm)	Alarm Level in. (mm)	
	Minimum 'T'	Maximum 'S'
0.5 to 174.0 (13 to 4420)(1)	6.77 (172)	173.2 (4400)(1)

(1) When the maximum rod length is specified.

Figure 4. Pump control and alarm applications

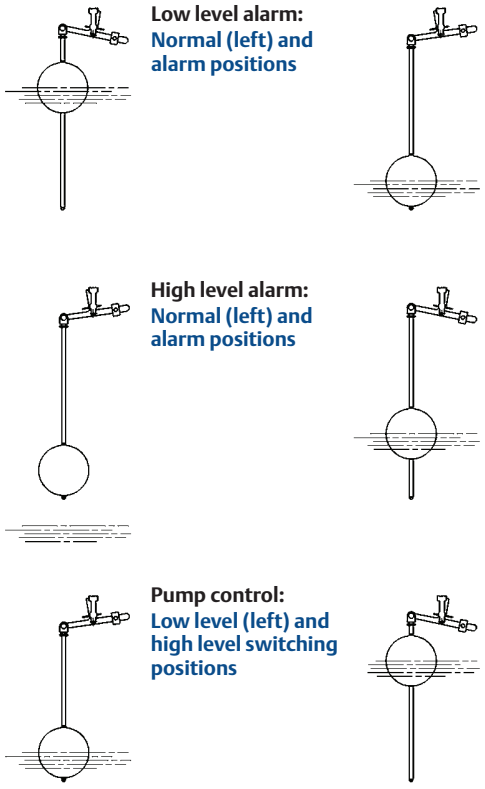

Cranked arm floats F104

Note: See Table 19 or Table 20 for dimensions in mm.

HORIZONTALLY MOUNTED
F104/* FLOAT

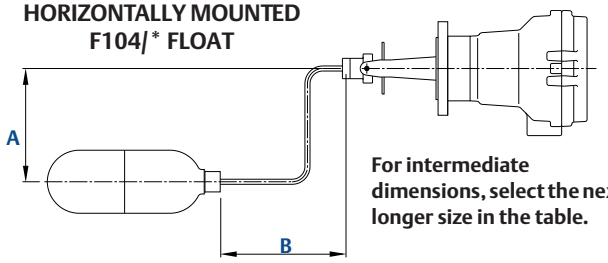

For intermediate dimensions, select the next longer size in the table.

A plus B must not exceed 750 mm. A and B should *each* be equal to or greater than 75 mm, unless it is a straight arm where A is 0 mm (*right*).

To order, specify the F104 float with these details:

1. A and B (*this page*) **or** V and W (*next page*) dimensions. (For a straight arm float, state only the 'B' dimension).
2. Liquid in contact.
3. Specific Gravity (SG) of liquid.
4. Magnetic switch head type number (e.g. S01DB/F)
5. State land or marine application.

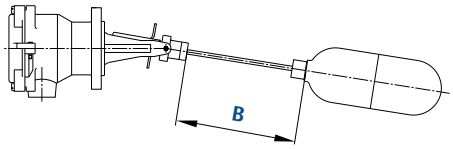

Table 19. Dimensions A and B with min. SG for horizontally-mounted switches (land applications)

	B																								
	75	100	125	150	175	200	225	250	275	300	325	350	375	400	425	450	475	500	525	550	575	600	625	650	675
A																									
0 &75	.64	.64	.65	.66	.67	.67	.68	.69	.70	.71	.72	.73	.73	.74	.75	.76	.77	.78	.79	.80	.81	.81	.82	.83	.84
100	.64	.65	.66	.67	.68	.69	.70	.70	.71	.72	.73	.74	.75	.76	.77	.78	.79	.79	.80	.81	.82	.83	.84	.85	
125	.65	.66	.67	.68	.69	.70	.71	.72	.73	.74	.75	.75	.76	.77	.78	.79	.80	.81	.82	.83	.84	.85	.86		
150	.65	.67	.68	.69	.70	.71	.72	.73	.74	.75	.76	.77	.78	.79	.80	.81	.82	.83	.84	.85	.85	.86			
175	.66	.67	.69	.70	.71	.72	.73	.74	.75	.76	.77	.78	.79	.80	.81	.82	.83	.84	.85	.86	.87				
200	.66	.68	.70	.71	.72	.73	.75	.76	.77	.78	.79	.80	.81	.82	.83	.84	.85	.86	.87	.88					
225	.67	.69	.70	.72	.73	.75	.76	.77	.78	.79	.80	.81	.82	.84	.85	.86	.87	.88	.89						
250	.67	.69	.71	.73	.74	.76	.77	.78	.80	.81	.82	.83	.84	.85	.86	.87	.88	.89							
275	.68	.70	.72	.74	.76	.77	.78	.80	.81	.82	.83	.85	.86	.87	.88	.89	.90								
300	.68	.71	.73	.75	.77	.78	.80	.81	.82	.84	.85	.86	.87	.88	.89	.90									
325	.69	.71	.74	.76	.78	.80	.81	.83	.84	.85	.86	.88	.89	.90	.91										
350	.69	.72	.75	.77	.79	.81	.82	.84	.85	.87	.88	.89	.90	.92											
375	.70	.72	.76	.78	.80	.82	.84	.85	.87	.88	.90	.91	.92												
400	.71	.73	.76	.79	.81	.83	.85	.87	.88	.90	.91	.92													
425	.71	.74	.77	.80	.83	.85	.87	.88	.90	.91	.93														
450	.72	.74	.78	.81	.84	.86	.88	.90	.91	.93															
475	.72	.75	.79	.82	.85	.87	.89	.91	.93																
500	.73	.76	.80	.83	.86	.89	.91	.93																	
525	.74	.77	.81	.85	.88	.90	.92																		
550	.74	.77	.81	.86	.89	.92																			
575	.75	.78	.82	.87	.90																				
600	.76	.79	.83	.88																					
625	.76	.80	.84																						
650	.77	.80																							
675	.78																								

Table 20. Dimensions A and B with Min. SG for horizontally-mounted switches (marine applications)

	B																								
	75	100	125	150	175	200	225	250	275	300	325	350	375	400	425	450	475	500	525	550	575	600	625	650	675
A																									
0 &75	.67	.67	.68	.68	.69	.69	.70	.71	.72	.73	.73	.74	.75	.76	.77	.78	.79	.79	.80	.81	.82	.83	.84	.85	.86
100	.68	.68	.69	.70	.70	.71	.72	.73	.74	.74	.75	.76	.77	.78	.79	.80	.81	.81	.82	.83	.84	.85	.86	.87	
125	.69	.70	.71	.71	.72	.73	.74	.75	.76	.76	.77	.78	.79	.80	.81	.82	.83	.84	.84	.85	.86	.87	.88		
150	.71	.71	.72	.73	.74	.75	.76	.77	.78	.78	.79	.80	.81	.82	.83	.84	.85	.86	.87	.88	.89	.89			
175		.73	.74	.75	.76	.77	.78	.79	.80	.81	.82	.83	.83	.84	.85	.86	.87	.88	.89	.90	.91				
200			.76	.77	.78	.79	.80	.81	.82	.83	.84	.85	.86	.87	.88	.89	.90	.90	.91	.92					
225			.79	.80	.81	.82	.83	.84	.85	.86	.86	.87	.88	.89	.90	.91	.92	.93	.94						
250				.83	.84	.85	.86	.87	.87	.88	.89	.90	.91	.92	.93	.94	.95	.95							
275					.88	.88	.89	.90	.91	.91	.92	.93	.94	.95	.96	.96	.97								
300					.93	.93	.93	.93	.94	.95	.95	.96	.97	.98	.99	.99									
325						.98	.98	.98	.98	.98	.99	1.0	1.0	1.01	1.02										
350							1.04	1.03	1.02	1.03	1.03	1.03	1.04	1.04											
375								1.09	1.08	1.07	1.07	1.07	1.08												
400									1.15	1.13	1.12	1.12													
425										1.20	1.18														

Note: See Table 21 or Table 22 for dimensions in mm.

VERTICALLY MOUNTED
F104 FLOAT

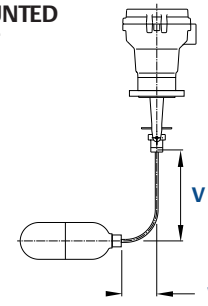

For intermediate dimensions, select the next longer size in the table.

V plus W must not exceed 750 mm. V and W should *each* be equal to or greater than 75 mm.

Table 21. Dimensions V and W with minimum SG for vertically-mounted switches (land applications)

	W																								
	75	100	125	150	175	200	225	250	275	300	325	350	375	400	425	450	475	500	525	550	575	600	625	650	675
V																									
75	.67	.67	.66	.66	.66	.66	.67	.67	.68	.68	.68	.70	.70	.71	.72	.73	.73	.74	.75	.76	.77	.77	.78	.79	.80
100	.67	.66	.66	.66	.66	.66	.67	.67	.68	.68	.69	.70	.70	.71	.72	.73	.73	.74	.75	.76	.77	.77	.78	.79	
125	.67	.66	.66	.66	.66	.66	.67	.67	.68	.68	.69	.70	.70	.71	.72	.73	.74	.74	.75	.76	.77	.78	.78		
150	.67	.66	.66	.66	.66	.66	.67	.67	.68	.68	.69	.70	.71	.71	.72	.73	.74	.74	.75	.76	.77	.78			
175	.67	.66	.66	.66	.66	.66	.67	.67	.68	.69	.69	.70	.71	.71	.72	.73	.74	.75	.75	.76	.77				
200	.67	.66	.66	.66	.66	.67	.67	.68	.68	.69	.69	.70	.71	.72	.72	.73	.74	.75	.75	.76					
225	.66	.66	.66	.66	.66	.67	.67	.68	.68	.69	.70	.70	.71	.72	.72	.73	.74	.75	.76						
250	.66	.66	.66	.66	.67	.67	.67	.68	.68	.69	.70	.70	.71	.72	.73	.73	.74	.75							
275	.67	.66	.66	.67	.67	.67	.68	.68	.69	.69	.70	.71	.71	.72	.73	.73	.74								
300	.67	.67	.66	.67	.67	.67	.68	.68	.69	.69	.70	.71	.71	.72	.73	.74									
325	.67	.67	.67	.67	.67	.67	.68	.68	.69	.70	.70	.71	.72	.72	.73										
350	.67	.67	.67	.67	.67	.68	.68	.69	.69	.70	.70	.71	.72	.72											
375	.68	.67	.67	.67	.67	.68	.68	.69	.69	.70	.71	.71	.72												
400	.68	.67	.67	.67	.68	.68	.68	.69	.70	.70	.71	.71													
425	.68	.68	.68	.68	.68	.68	.69	.69	.70	.70	.71														
450	.68	.68	.68	.68	.68	.68	.69	.69	.70	.71															
475	.69	.68	.68	.68	.68	.69	.69	.70	.70																
500	.69	.69	.68	.68	.69	.69	.69	.70																	
525	.69	.69	.69	.69	.69	.69	.70																		
550	.70	.69	.69	.69	.69	.70																			
575	.70	.70	.69	.69	.70																				
600	.70	.70	.70	.70																					
625	.71	.70	.70																						
650	.71	.71																							
675	.72																								

Table 22. Dimensions V and W with Min. SG for vertically-mounted switches (marine applications)

	W																								
	75	100	125	150	175	200	225	250	275	300	325	350	375	400	425	450	475	500	525	550	575	600	625	650	675
V																									
75	.75	.72	.70	.69	.68	.68	.68	.68	.68	.69	.70	.71	.71	.72	.73	.74	.74	.75	.76	.77	.78	.79	.79	.80	.81
100	.76	.72	.70	.68	.67	.68	.68	.68	.69	.70	.70	.71	.72	.73	.73	.74	.75	.76	.77	.77	.78	.79	.80	.81	
125	.77	.72	.69	.67	.67	.68	.68	.69	.69	.70	.71	.72	.72	.73	.74	.75	.75	.76	.77	.78	.79	.80	.80		
150	.79	.72	.68	.67	.67	.68	.69	.69	.70	.71	.71	.72	.73	.74	.74	.75	.76	.77	.78	.78	.79	.80			
175		.71	.67	.67	.68	.68	.69	.70	.70	.71	.72	.73	.73	.74	.75	.76	.76	.77	.78	.79	.80				
200			.67	.68	.68	.69	.70	.70	.71	.72	.72	.73	.74	.75	.75	.76	.77	.78	.79	.79					
225				.68	.69	.70	.70	.71	.72	.72	.73	.74	.74	.75	.76	.77	.78	.78	.78						
250				.69	.70	.70	.71	.71	.72	.73	.74	.74	.75	.76	.77	.77	.78	.78							
275					.70	.71	.71	.72	.73	.73	.74	.75	.76	.76	.77	.78	.79								
300						.71	.73	.73	.73	.74	.75	.76	.76	.77	.78	.79									
325							.73	.73	.74	.75	.75	.76	.77	.78	.78										
350								.74	.75	.75	.76	.77	.78	.78											
375									.75	.76	.77	.77	.78												
400										.77	.77	.78													
425											.78														

The Emerson logo is a trademark and service mark of Emerson Electric Co.
Rosemount is a registered trademark of Rosemount Inc.
Mobrey is a registered trademark of Rosemount Measurement Ltd.
All other marks are the property of their respective owners.
Standard Terms and Conditions of Sale can be found at www.rosemount.com\terms_of_sale

© 2015 Rosemount Measurement Limited. All rights reserved.

Emerson Process Management
Rosemount Measurement Ltd.
158 Edinbugh Avenue,
Slough, Berks., SL1 4UE, UK
Tel +44 (0)1753 756600
Fax +44 (0)1753 823589
www.emersonprocess.com

Emerson Process Management
Rosemount Inc.
8200 Market Boulevard
Chanhassen MN 55317 USA
Tel (USA) 1 800 999 9307
Tel (International) +1 952 906 8888
Fax +1 952 906 8889

mobrey

EMERSON
Process Management

Product Data Sheet
February 2015
IP116

Mobrey M-Switch

Float Operated Liquid Level Switch

- Reliably detects the liquid level to give a voltage free contact operation for alarm signalling or as part of a pump control system
- Small in-tank dimensions, suitable for use where space in a vessel is limited
- Available for side mounting with either a flanged or 2-in. threaded connection
- Tough industrial build quality with 316 Stainless steel construction throughout
- European directive compliance
- ATEX and IECEx flameproof models (Ex d)

mobrey

EMERSON™
Process Management

Overview of Mobrey M-Switch

Vertical cylindrical tank with two M-Switches fitted

Introduction

Manufactured in 316 stainless steel throughout, the M-Switch is available for side mounting with either a flange or 2-in. thread.

Comprising a small float on the wetside and a body containing a micro-switch on the dryside, the Mobrey M-Switch reliably detects liquid level to give a voltage-free contact operation for alarm signalling or as part of a pump control system.

Operating principle

One permanent magnet forms part of a float assembly which rises and falls with changing liquid level. A second permanent magnet is positioned within the switch so that the adjacent poles of the two magnets repel each other through the nonmagnetic wall of the switch body.

A change of liquid level which moves the float through its permissible travel will cause the float magnet to move and repel the switch magnet to operate the micro-switch contacts.

Wireless option

All the models in the Mobrey range of float switches are available for use with the Rosemount 702 wireless discrete transmitter, allowing plant managers to cost-effectively access valuable data about the performance and safety of their plant.

The advent of wireless communications allows process plant managers to save up to 90% of installation cost compared with wired technologies.

Typical applications

- Low level alarms in lubricating oils and fuel oils
- Pump control duty in header tanks
- High and low alarms in condensate tanks
- Level and pump control in storage tanks

Installation

The M-Switch is designed for side mounting either direct into a vessel or in an external chamber.

Choose a position where the effects of turbulence caused by agitators or inlets are minimized.The switch should be positioned so that the float may move freely over its full travel and not foul the sides, bottom, or top of the tank.

A flange or threaded boss is recommended for pressurised applications, designed such that the float is free to move over its full travel.

Contents

Overview of Mobrey M-Switch . . . . . page 90
Mobrey M-Switch Ordering Information . . . . . page 91
Specifications . . . . . page 92
Dimensional Drawings . . . . . page 93

Mobrey M-Switch Ordering Information

Specification and selection of product materials, options, or components must be made by the purchaser of the equipment. See Material selection below for more information.

Table 1. M-Switch ordering information

★The Standard offering represents the most common options. The starred options (★) should be selected for best delivery. The Expanded offering is subject to additional delivery lead time.

Model	Product Description	
SM	M-Switch, 316 Stainless steel construction	
Mounting Arrangement (1)		
Standard		**Standard**
A	Mobrey 'A' flange	★
D(2)	Mobrey 'D' flange	★
B	2-in. BSPT threaded	★
N	2-in. NPT threaded	★
Enclosure		
Standard		**Standard**
1	Weatherproof IP66/67 (NEMA 4)	★
2(3)	Flameproof ATEX and IECEx, IP66/IP67 (NEMA 4)	★
Typical Model Number: SM B 1		

(1) See Table 2 on page 92 for the maximum pressure rating of each mounting arrangement.

(2) Not available on the flameproof version of the M-Switch.

(3) See "Specifications" on page 92 for the ATEX and IECEx approval codings.

Material selection

Emerson provides a variety of Mobrey products with various product options and configurations including materials of construction that can be expected to perform well in a wide range of applications. The Mobrey product information presented is intended as a guide for the purchaser to make an appropriate selection for the application. It is the purchaser's sole responsibility to make a careful analysis of all process parameters (such as all chemical components, temperature, pressure, flow rate, abrasives, contaminants, etc.), when specifying product, materials, options and components for the particular application. Emerson Process Management is not in a position to evaluate or guarantee the compatibility of the process fluid or other process parameters with the product, options, configuration or materials of construction selected.

Specifications

General	
Product	M-Switch Float Operated Liquid Level Switch
Minimum liquid specific gravity	0.75
Differential	1 in. (25 mm)
Length into tank	6 in. (153 mm)
Float diameter	∅1.9 in. (∅48 mm)
Maximum float swing	4.4 in. (112 mm)
Switching function (See Figure 1)	SPCO (Single-Pole-Change-Over) relay
Construction materials	
Wetside material	316 Stainless steel
Body material	316 Stainless steel
End cover material	316 Stainless steel
Gasket	Non-asbestos for Mobrey 'A' flange
	Ethylene propylene for Mobrey 'D' flange
Electrical	
Conduit entry	M20 for flanged and BSPT threaded versions
	½-in. NPT for NPT threaded versions
Maximum voltage and current	See Table 3 for the maximum voltage and current
	The microswitch contacts are gold-plated and are suitable for use in low-power circuits. Switching high-power circuits can permanently damage the gold-plating. Not suitable for the direct starting of large motors.
Environment	
Operating temperature	32 to 266 °F (0 to 130 °C)
Ambient temperature	32 to 140 °F (0 to 60 °C)
Operating pressure	See Table 2 for the maximum pressure ratings
Approvals	
Enclosure ratings	Weatherproof M-Switch: IP66/67 (NEMA 4)
	Flameproof M-Switch: ATEX: II 1/2G Ex d IIC T6 Ga/Gb IECEx: Ex d IIC T6 Ga/Gb IP66/IP67 (NEMA 4)
Marine	Germanischer Lloyd

Table 2. Maximum pressure ratings

Mounting Arrangement	Maximum P @ T_{room}			
	Weatherproof		Flameproof	
Mobrey 'A' flange	275 psi	19 bar	362 psi	25 bar
Mobrey 'D' flange	43 psi	3 bar	Not applicable	
2-in. BSPT threaded	275 psi	19 bar	720 psi	49.6 bar
2-in. NPT threaded	275 psi	19 bar	720 psi	49.6 bar

Table 3. Maximum voltage and current

Maximum voltage and current	AC	DC (Resistive)	DC (Conductive)
Max. voltage (V)	250	250	250
Max. current (A)	15	0.25	15

Figure 1. Switching function

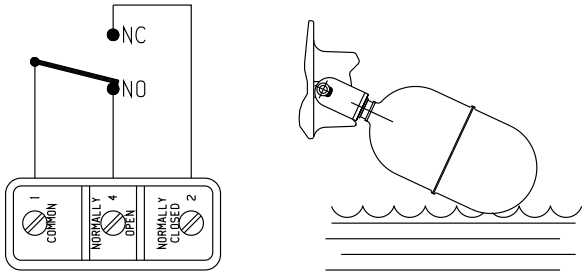

NO (Normally Open) is made on a falling level.
NC (Normally Closed) is made on a rising level.

Product Selection
Contents

Dimensional Drawings

M-Switch dimensions

Note: Dimensions are in inches (mm).

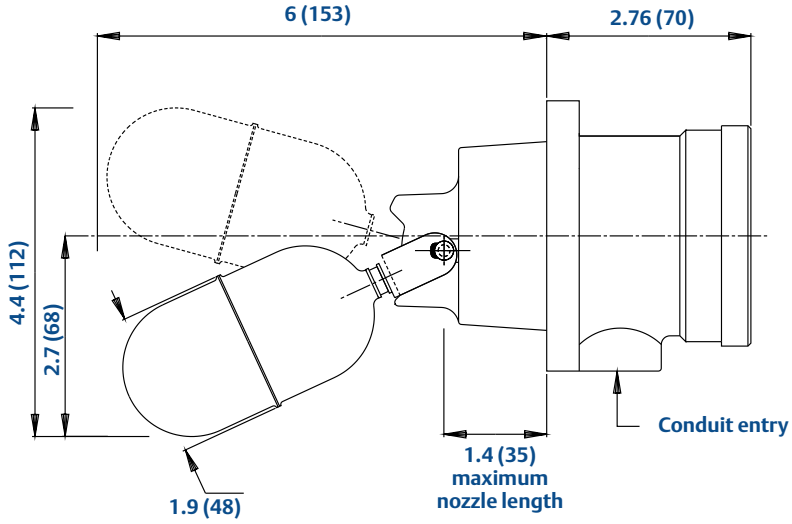

Mobrey 'A' and 'D' flange dimensions

Note: See Table 4 for dimensions.

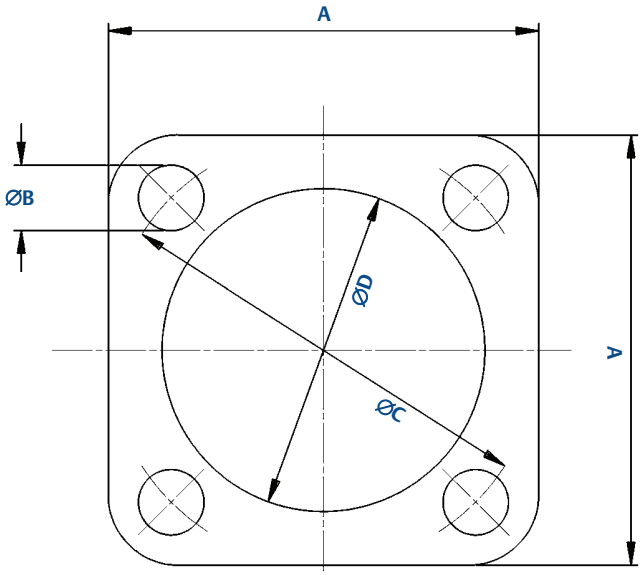

Table 4. Mobrey flange dimensions(1)

Mobrey Flange	A	B	C	D(2)
Mobrey 'A' Flange	3.6 (92)	0.55 (14)	3.6 (92)	2.6 (66)
Mobrey 'D' Flange	3.6 (92)	0.35 (9)	3.3 (83)	2.0 (50)

(1) Dimensions are in inches (mm)

(2) Mounting hole diameter D to be ±0.4 in. (1 mm).

The Emerson logo is a trademark and service mark of Emerson Electric Co.
Rosemount is a registered trademark of Rosemount Inc.
Mobrey is a registered trademark of Rosemount Measurement Ltd.
All other marks are the property of their respective owners.
Standard Terms and Conditions of Sale can be found at www.rosemount.com\terms_of_sale

© 2015 Rosemount Measurement Limited. All rights reserved.

Emerson Process Management
Rosemount Measurement Ltd.
158 Edinbugh Avenue,
Slough, Berks., SL1 4UE, UK
Tel +44 (0)1753 756600
Fax +44 (0)1753 823589
www.emersonprocess.com

Emerson Process Management
Rosemount Inc.
8200 Market Boulevard
Chanhassen, MN 55317, USA
Tel (USA) 1 800 999 9307
Tel (International) +1 952 906 8888
Fax +1 952 906 8889

mobrey

EMERSON
Process Management

Product Data Sheet
February 2015
IP107

Mobrey Magnetic Vertical Level Switches

For Critical Area Applications or General Purpose Control

- Rugged, robust, and trusted all over the world
- Ideal for tough process control duties
- Operates in almost any liquid at high pressures and temperatures
- Multiple switch points
- Unique three-magnet, snap action, and latching switch mechanism
- Unique hermetically-sealed switching mechanism option
- Unique treble-seal pressure tube and union
- Wide range of mounting options
- External chamber options

mobrey

EMERSON™
Process Management

Overview of Mobrey Vertical Level Switches

Mobrey side-and-side chamber with a float level switch fitted

Introduction

Whether you require a switch for critical area applications or just general purpose control, the extensive range of Mobrey switches ensures that we will always have a solution to your particular problem.

A choice of displacer-type or float-type operated level switch is available to order for direct vertical mounting (no chamber included). See Table 1 on page 98 or Table 2 on page 100 for ordering information.

These level switches can be optionally supplied mounted vertically in chambers, in a sealed or removable form. A range of carbon steel chambers are available, and for more vigorous applications there are stainless steel chambers. See Table 3 on page 102 for ordering information.

There are a variety of instrument and process connection options available to make installation simple and economic. This gives you the choice to meet your application in keeping with your budget.

Quality and reliability

Mobrey vertical magnetic level switches for industrial and process control use have been available for over 20 years and have gained a reputation for quality and reliability.

Direct mounted level switch with 3-in. float

Choice of switching mechanisms

There are two switching functions available: 2 x SPST (SPCO) or DPDT (DPCO) switching, and each comes in four variants:

- **General purpose** with silver cadmium oxide contacts for long life
- **Low power circuit** with gold-plated contacts for use in low current and voltage applications such as Intrinsically Safe (IS) circuits
- **High power circuits** giving up to 10 Amps switching capability
- **Hermetically-sealed** for the ultimate in reliability – *sealed for life*

Based on the industry-standard boiler water level controls, these controls use the same three-magnet switch mechanism for snap-action latching and switching. The design of this unique switch mechanism overcomes all the inherent problems of mercury tubes and micro switches. Even under severe vibration conditions, there are no springs to cause contact bounce, hover, or even failure. The snap-action magnets give a positive and stable latching, time after time after time.

Operation in extreme conditions

When controls are required to operate in extreme conditions, the unique Mobrey hermetically-sealed switch provides dependable life-long operation that you can rely on. With all its moving parts and contacts completely enclosed, this genuine hermetically-sealed switch is suitable for use in corrosive atmospheres and low temperature environments.

Contents

Overview of Mobrey Vertical Level Switches . . . . . page 96
Ordering Information . . . . . page 98
Technical Specifications . . . . . page 104
Dimensional Drawings . . . . . page 110

Features

- Unique switching mechanism – *totally reliable*
- No springs in switch mechanism – *positive snap action switching*
- Vibration resistant – *eliminates spurious trips*
- Multiple switch point options – *cost effective control*
- Genuine hermetically-sealed switch option – *totally safe and secure*
- Extensive range of chambers – *suitable for most applications*
- Relevant chambers are supplied CE marked and fully compliant with the Pressure Equipment Directive (97/23/EC)
- Designed to ASME B31.3
- Weld procedures approved to EN ISO 15614-1 and ASME IX
- Welders approved to EN 287-1
- Material certification to EN 10204, 3.1
- Materials to ASTM and British Standards (BS)

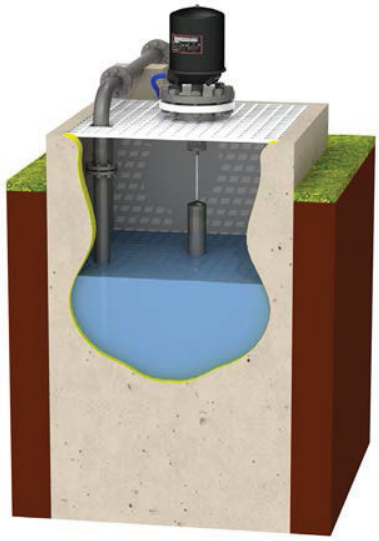

Sump application with direct mounted displacer-type level switch

Approvals

- CSA approval:
  Explosion-proof for Class 1, Div 1, Groups B, C, and D
- Factory Mutual (FM) approval:
  Explosion-proof for Class I, Div 1, Groups B, C, and D
  Class II, Div 1, Groups E, F, and G
  General Area, Weatherproof type NEMA 4
- Flameproof ATEX II 1/2G Ex d IIC T6 Ga/Gb (-50 °C ≤ Ta ≤ 60 °C)
- Flameproof IECEx Ex d IIC T6 Ga/Gb (-50 °C ≤ Ta ≤ 60 °C)
- Technical Regulation Customs Union (EAC) Flameproof 1Exd IIC T6X
  (see certificate RU C-GB.ГБ06.B.00078 for Ta range) and Ordinary Location Mark

Intrinsically Safe Use

For intrinsically safe circuits, gold-plated switch contacts are recommended. Users are reminded that it is their responsibility to obtain the necessary system approval and licences for such circuits.

Direct mounted level switch with displacer type 11D

BS EN ISO 9001: 2008

Rosemount Measurement has been assessed and approved by Lloyds Register Quality Assurance against BS EN ISO 9001: 2008 for the design, development, assembly and re-calibration of precision instruments and systems for the measurement and indication of electrical signals, gas and liquid density, viscosity, pressure, level, flow and water/steam systems.

Quality assurance

With over 20 years worldwide experience in the major power, nuclear and petro-chemical industries, we are able to accommodate testing, surveying and documentation requirements as specified at the time of order. Inspection by customers or nominated inspection agencies can be arranged.

Ordering Information

Specification and selection of product materials, options, or components must be made by the purchaser of the equipment.

See page 104 for more information on Material Selection.

Ordering information: direct mounting vertical displacer-type level switch . . . . . page 98
Ordering information: direct mounting vertical float-type level switch . . . . . page 100
Ordering information: chamber with mounted vertical float-type level switch . . . . . page 102

Table 1. Ordering information: direct mounting vertical displacer-type level switch

★The Standard offering represents the most common options. The starred options (★) should be selected for best delivery.
The Expanded offering is subject to additional delivery lead time

Product Description				
D[1]	Direct mounting vertical level control (no chamber)			
Mounting Flange Material			**Temperature Range**	
Standard				**Standard**
C	Carbon steel		–10 to +300 °C	★
S	316L stainless steel		–50 to +300 °C	★
Function and Specification[2]		**Maximum Pressure at 20 °C**	**Temperature Range**	
Standard				**Standard**
11D[3]	Displacer, 3-in. NB, one switch, narrow differential	102 bar	–50 to +300 °C (See also Switch Mechanism Type for further limits)	★
12D[3]	Displacer, 3-in. NB, one switch, wide differential			★
13D[3]	Displacer, 3-in. NB, two switches, two wide differentials			★
18D[3]	Displacer, 3-in. NB, two switches, two narrow differentials			★
Expanded				
20D[4]	Floating roof detection			
21D[4]	Floating roof and overflow detection			
Switch Enclosure[5]				
Standard				**Standard**
S	150 mm (can fit one or two switch mechanisms)			★
Product Certifications			**Enclosure Material**	
Standard				**Standard**
E5	FM explosion-proof		A or I	★
E6	CSA explosion-proof		A or I	★
EM[6]	Technical Regulation Customs Union (EAC) Flameproof		[6]	★
G5	FM ordinary location (unclassified, safe area)		N	★
G6	CSA ordinary location (unclassified, safe area)		N	★
GM[6]	Technical Regulation Customs Union (EAC) Ordinary Locations Mark		[6]	★
KN	ATEX / IECEx flameproof		A or I	★
NA	No hazardous location certificates		N	★
Switch Enclosure Housing Material				
Standard				**Standard**
N	Aluminium alloy base, drawn steel cover			★
A	Aluminium alloy			★
I	Cast iron			★
Conduit Entry				
Standard				**Standard**
A	1-in NPT			★
B	20 mm thread			★

Table 1. Ordering information: direct mounting vertical displacer-type level switch

★The Standard offering represents the most common options. The starred options (★) should be selected for best delivery.
The Expanded offering is subject to additional delivery lead time

Number of Switch Mechanisms			
Standard			**Standard**
1	One switch		★
2	Two switches		★
Switch Mechanism Type (7)		**Maximum Wetside Temperature** (8)	
Standard			**Standard**
D4	4 Contact: 2 × SPST (SPCO), general purpose	300 °C	★
P4	4 Contact: 2 × SPST (SPCO), low power circuits		★
X4	4 Contact: 2 × SPST (SPCO), high power circuits	250 °C	★
H4	4 Contact: 2 × SPST (SPCO), hermetically sealed		★
D8	8 Contact: DPDT (DPCO), general purpose	300 °C	★
P8	8 Contact: DPDT (DPCO), low power circuits		★
X8	8 Contact: DPDT (DPCO), high power circuits	250 °C	★
H8	8 Contact: DPDT (DPCO), hermetically sealed		★
Process Connection Size (9)			
Standard			**Standard**
1	1 in. / 25 mm		★
3	3 in. / 80 mm		★
4	4 in. / 100 mm		★
Process Connection Rating (9)		**Connection Size**	
Standard			**Standard**
AA	ASME B16.5 Class 150	3 or 4	★
AB	ASME B16.5 Class 300	3 or 4	★
AC	ASME B16.5 Class 600	3 or 4	★
NN	NPT thread, 316 stainless steel	1	★
Process Connection Type		**Connection Rating**	
Standard			**Standard**
R	Raised Face (RF) flange	AA, AB, or AC	★
N	NPT thread, 316 stainless steel	NN	★
Typical Model Number: D C 13D S NA N A 2 D4 3 AA R			

(1) Supplied with 3 m of 316 stainless steel displacer cable as standard. Other lengths are available on request.
(2) The switching-point is adjusted by moving the displacer elements on the cable. See "Displacer-type dimensions" on page 110 for information about this.
(3) For minimum specific gravity requirements, see the section "Displacer-type dimensions" on page 110.
(4) This switch is designed specifically for use on floating roof tanks to signal an alarm if the roof rises too high. See Product Data Sheet IP107/FR for full details.
(5) See "Mobrey switch enclosures" on page 107 for information about these options.
(6) Contact an Emerson Process Management representative for additional information.
(7) See "Mobrey switch mechanisms and ratings" on page 106 for information about these options.
(8) The maximum wetside temperatures shown here override the maximum wetside temperatures shown in Table 6 on page 106.
(9) Other flange sizes and ratings are available on request.

Table 2. Ordering information: direct mounting vertical float-type level switch

★The Standard offering represents the most common options. The starred options (★) should be selected for best delivery.
The Expanded offering is subject to additional delivery lead time

Product Description					
D[1]	Direct mounting vertical level control (no chamber)				
Mounting Flange Material			**Temperature Range**		
Standard					**Standard**
C	Carbon steel		–10 to +400 °C		★
S	316L stainless steel		–101 to +400 °C		★
Function and Specification		**Pressure Rating (in Bar)**			
		20 °C	**250 °C**	**400 °C**	
Standard					**Standard**
11F[2]	Float, 3-in. NB, minimum SG 0.80	34.5	22.5	20.2	★
12F[3]	Float, 4-in. NB, minimum SG 0.75	102.1	66.5	59.2	★
13F[3]	Float, 4-in. NB, minimum SG 0.65	51.1	33.2	29.6	★
14F[3]	Float, 4-in. NB, minimum SG 0.54	19.6	12.7	11.3	★
17D[4]	Float, spring-assisted, 4-in. NB, minimum SG 0.4	102.1	66.5	59.2	★
Switch Enclosure[5]			**Product Certifications**		
Standard					**Standard**
R	62 mm (can fit a single switch mechanism)		All		★
S	150 mm (can fit up to four switch mechanisms)		All		★
L	250 mm (can fit up to six switch mechanisms)		G5 or NA		★
Product Certifications			**Enclosure Material**		
Standard					**Standard**
E5	FM explosion-proof		A or I		★
E6	CSA explosion-proof		A or I		★
EM[6]	Technical Regulation Customs Union (EAC) Flameproof		[6]		★
G5	FM ordinary location (unclassified safe area)		N		★
G6	CSA ordinary location (unclassified safe area)		N		★
GM[6]	Technical Regulation Customs Union (EAC) Ordinary Locations Mark		[6]		★
KN	ATEX / IECEx flameproof		A or I		★
NA	No hazardous location certificates		N		★
Switch Enclosure Housing Material					
Standard					**Standard**
N	Aluminium alloy base, drawn steel cover				★
A	Aluminium alloy				★
I	Cast iron				★
Conduit Entry					
Standard					**Standard**
A	1-in NPT				★
B	20 mm thread				★
Number of Switch Mechanisms					
Standard					**Standard**
1	One switch				★
2	Two switches				★
3	Three switches				★
4	Four switches				★
5	Five switches				★
6	Six switches				★

Table 2. Ordering information: direct mounting vertical float-type level switch

★The Standard offering represents the most common options. The starred options (★) should be selected for best delivery.
The Expanded offering is subject to additional delivery lead time

Switch Mechanism Type [7]		Maximum Wetside Temperature	
Standard			**Standard**
D4	4 Contact: 2 × SPST (SPCO), general purpose	400 °C	★
P4	4 Contact: 2 × SPST (SPCO), low power circuits		★
X4	4 Contact: 2 × SPST (SPCO), high power circuits	250 °C	★
H4	4 Contact: 2 × SPST (SPCO), hermetically sealed		★
D8	8 Contact: DPDT (DPCO), general purpose	400 °C	★
P8	8 Contact: DPDT (DPCO), low power circuits		★
X8	8 Contact: DPDT (DPCO), high power circuits	250 °C	★
H8	8 Contact: DPDT (DPCO), hermetically sealed		★
Process Connection Size [8]			
Standard			**Standard**
1	1 in. / 25 mm		★
3	3 in. / 80 mm		★
4	4 in. / 100 mm		★
Process Connection Rating [8]		**Connection Size**	
Standard			**Standard**
AA	ASME B16.5 Class 150	3 or 4	★
AB	ASME B16.5 Class 300	3 or 4	★
AC	ASME B16.5 Class 600	3 or 4	★
NN	NPT thread, 316 stainless steel	1	★
Process Connection Type		**Connection Rating**	
Standard			**Standard**
R	Raised Face (RF) flange	AA, AB, or AC	★
N	NPT thread, 316 stainless steel	NN	★
Typical Model Number: D C 14F S NA N A 1 D4 4 AA R			

(1) See "Float-type level switches" on page 104 for information about how the float-type level switches (**F) operate.
(2) Mounting flange 3-in NB (Nominal Bore) or larger.
(3) Mounting flange 4-in NB (Nominal Bore) minimum.
(4) This float option is available when selecting Switch Enclosure code S and a single switching mechanism.
(5) See "Mobrey switch enclosures" on page 107 for information about these options.
(6) Contact an Emerson Process Management representative for additional information.
(7) See "Mobrey switch mechanisms and ratings" on page 106 for information about these options.
(8) Other flange sizes and ratings are available on request.

Table 3. Ordering information: chamber with mounted vertical float-type level switch

★The Standard offering represents the most common options. The starred options (★) should be selected for best delivery.
The Expanded offering is subject to additional delivery lead time

Product Description				
B	Chamber mount vertical control. Bottle style			
X	Chamber mount vertical control. Flanged style			
Mounting Flange Material			**Temperature Range**	
Standard				**Standard**
C	Carbon steel		-10 to +400 °C	★
S	316L stainless steel		-101 to +400 °C	★
Function and Specification[1]		**Chamber Body Size**	**Maximum Pressure**	
Standard				**Standard**
11F	Float, 3-in. NB, minimum SG 0.80	3-in. NB or larger	See Table 4 or Table 5 on page 103 for the maximum ratings when mounted in the B* or X* chamber	★
12F	Float, 4-in. NB, minimum SG 0.75	4-in. NB minimum		★
13F	Float, 4-in. NB, minimum SG 0.65			★
14F	Float, 4-in. NB, minimum SG 0.54			★
17D[2]	Float, spring-assisted, 4-in. NB, minimum SG 0.4			★
Switch Enclosure[3]				
Standard				**Standard**
R	62 mm (can fit a single switch mechanism)			★
S	150 mm (can fit up to four switch mechanisms)			★
Product Certifications			**Enclosure Material**	
Standard				**Standard**
E5	FM explosion-proof		A or I	★
E6	CSA explosion-proof		A or I	★
EM[4]	Technical Regulation Customs Union (EAC) Flameproof		[4]	★
G5	FM ordinary location (unclassified, safe area)		N	★
G6	CSA ordinary location (unclassified, safe area)		N	★
GM[4]	Technical Regulation Customs Union (EAC) Ordinary Locations Mark		[4]	★
KN	ATEX / IECEx flameproof		A or I	★
NA	No hazardous location certificates		N	★
Switch Enclosure Housing Material				
Standard				**Standard**
N	Aluminium alloy base, drawn steel cover			★
A	Aluminium alloy			★
I	Cast iron			★
Conduit Entry				
Standard				**Standard**
A	1-in NPT			★
B	20 mm thread			★
Number of Switch Mechanisms				
Standard				**Standard**
1	One switch			★
2	Two switches			★
3	Three switches			★
4	Four switches			★
Switch Mechanism Type [5]		**Maximum Wetside Temperature** [6]		
		Carbon St. Chamber	**Stainless St. Chamber**	
Standard				**Standard**
D4	4 Contact: 2 × SPST (SPCO), general purpose	400 °C	300 °C	★
P4	4 Contact: 2 × SPST (SPCO), low power circuits			★
X4	4 Contact: 2 × SPST (SPCO), high power circuits	250 °C	250 °C	★
H4	4 Contact: 2 × SPST (SPCO), hermetically sealed			★
D8	8 Contact: DPDT (DPCO), general purpose	400 °C	300 °C	★
P8	8 Contact: DPDT (DPCO), low power circuits			★

Table 3. Ordering information: chamber with mounted vertical float-type level switch

★The Standard offering represents the most common options. The starred options (★) should be selected for best delivery.
The Expanded offering is subject to additional delivery lead time

X8	8 Contact: DPDT (DPCO), high power circuits	250 °C	250 °C	★
H8	8 Contact: DPDT (DPCO), hermetically sealed			★
Instrument Connection Type				
Standard				**Standard**
R	Raised Face (RF) flange			★
N	NPT thread, 316 stainless steel, for use with bottle style chambers			★
Process Connection Orientation				
Standard				**Standard**
B	Side and side with 1-in. NPT drain			★
C	Side and bottom			★
Process Connection Size (7)				
Standard				**Standard**
1	1 in. / 25 mm (DN25)			★
5	1.5 in. / 40 mm (DN40)			★
2	2 in. / 50 mm (DN50)			★
Process Connection Rating (7)			**Connection Size**	
Standard				**Standard**
AA	ASME B16.5 Class 150		1, 5, or 2	★
AB	ASME B16.5 Class 300		1, 5, or 2	★
AC	ASME B16.5 Class 600		1, 5, or 2	★
NN	NPT thread, 316 stainless steel		1	★
Process Connection Type			**Connection Rating**	
Standard				**Standard**
R	Raised Face (RF) flange		AA, AB, or AC	★
N	NPT thread, 316 stainless steel		NN	★
Typical Model Number: X C 12F S KN A B 1 X4 R B 1 AA R				

(1) The float switch choice here also determines if a 3-in. or 4-in. chamber is supplied.
(2) This float option is available when selecting Switch Enclosure code S and a single switching mechanism.
(3) See "Mobrey switch enclosures" on page 107 for information about these options.
(4) Contact an Emerson Process Management representative for additional information.
(5) See "Mobrey switch mechanisms and ratings" on page 106 for information about these options.
(6) The maximum wetside temperatures shown here override the maximum wetside temperatures shown in Table 6 on page 106.
(7) Other flange sizes and ratings are available on request.

Table 4. Type 11F, 12F, 13F, 14F and 17D maximum pressure ratings (when mounted in a carbon steel chamber)

Float Type	Flanged Style Chambers (XC) Maximum Pressure Rating in Bar			Flanged Process Connections Maximum Pressure Rating in Bar			Threaded/Socket Process Connections Maximum Pressure Rating in Bar		
	20 °C	250 °C	400 °C	20 °C	250 °C	400 °C	20 °C	250 °C	400 °C
11F	34.5	22.5	20.0	30.1	22.5	20.0	30.1	22.5	20.0
12F	102.1	66.3	59.2	88.8	66.3	59.2	88.8	66.3	59.2
13F	51.1	33.2	29.6	44.6	33.2	29.6	44.6	33.2	29.6
14F	19.6	12.1	6.5	17.1	12.7	6.5	17.1	12.7	6.5
17D	102.1	66.3	59.2	88.8	66.3	59.2	88.8	66.3	59.2

Table 5. Type 12F, 13F, 14F and 17D maximum pressure ratings (when mounted in a stainless steel chamber)

Float Type	Flanged Style Chambers (XS)			Flanged Process Connections			Threaded/Socket Process Connections		
	20 °C	250 °C	400 °C	20 °C	250 °C	400 °C	20 °C	250 °C	400 °C
12F	82.7	54.9	48.6	82.7	54.9	48.6	88.8	66.3	59.2
13F	41.4	27.5	24.3	41.4	27.5	24.3	44.6	33.2	29.6
14F	15.9	10.5	6.5	15.9	10.5	6.5	17.1	12.7	11.3
17D	82.7	54.9	48.6	82.7	54.9	48.6	88.8	66.3	59.2

Technical Specifications

Material selection

Emerson provides a variety of Mobrey products with various product options and configurations including materials of construction that can be expected to perform well in a wide range of applications. The Mobrey product information presented is intended as a guide for the purchaser to make an appropriate selection for the application. It is the purchaser's sole responsibility to make a careful analysis of all process parameters (such as all chemical components, temperature, pressure, flow rate, abrasives, contaminants, etc.), when specifying product, materials, options and components for the particular application. Emerson Process Management is not in a position to evaluate or guarantee the compatibility of the process fluid or other process parameters with the product, options, configuration or materials of construction selected.

Float-type level switches

A vertical float-type level switch is usually mounted vertically on the top of a process vessel (tank) or in an external chamber (Figure 1), and relies upon the liquid lifting the float (using buoyancy principles) until it reaches a level that switches the output.

Figure 1.
Cut-away illustration showing a Mobrey vertical float-type level switch sealed in a Mobrey chamber

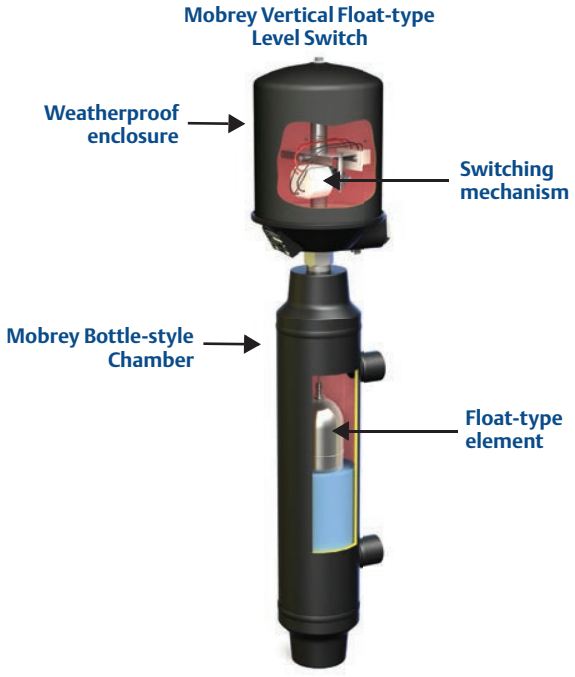

One or more switching mechanisms (see page 106) are mounted inside a weatherproof or flameproof enclosure. Switching is achieved with the unique Mobrey three-magnet system, giving reliable snap-action 'latch-on' switching.

The float element (Figure 2) carries a permanent magnet as part of the float and rod assembly which rises and falls vertically as a liquid level changes.

The vertical movement of the *first* permanent magnet interacts with a *second* permanent magnet that is inside the switching mechanism. This interaction simultaneously actuates a *third* permanent magnet (also in the switching mechanism) to actuate the contacts and indicate a switched output change.

The float magnet can continue upwards and actuate switch mechanisms at other level points. Switch mechanisms that are already actuated are not re-set until the float magnet returns and falls below the switch mechanism.

These electro-mechanical switches are not complicated and give a reliable switching output in high or low level alarm applications.

Where switching points are required a long distance below the mounting point of the vertical level switch, a displacer-type element (see page 105) can be used instead of a float-type element.

Figure 2. Float element types

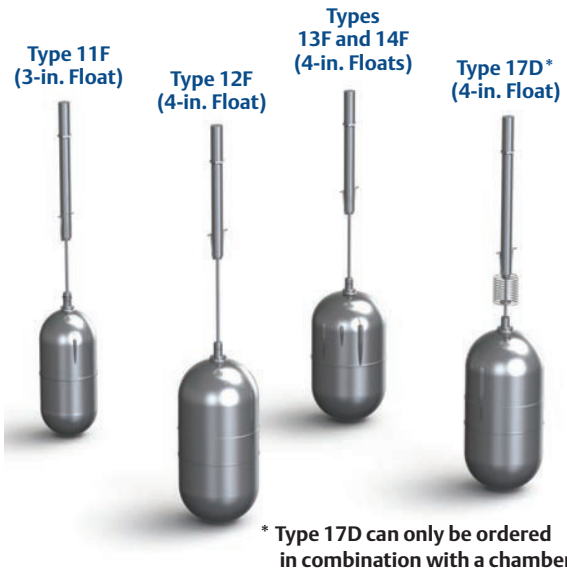

* Type 17D can only be ordered in combination with a chamber.

Note: See "Dimensional Drawings" on page 110 for more data.

Product Selection
Contents

Direct mount displacer controls

Mobrey displacer-operated controls are ideal for sump applications and other top-mounting duties such as a low level alarm warning in deep tanks.

The operation principles also make them suitable, in a modified form, for very high pressure or low specific gravity applications.

The four most popular displacer arrangements are shown in Figure 3, which covers most of the likely applications. However, if you have a different requirement, we would be pleased to quote a model for your particular application.

Figure 3. Popular displacer arrangements

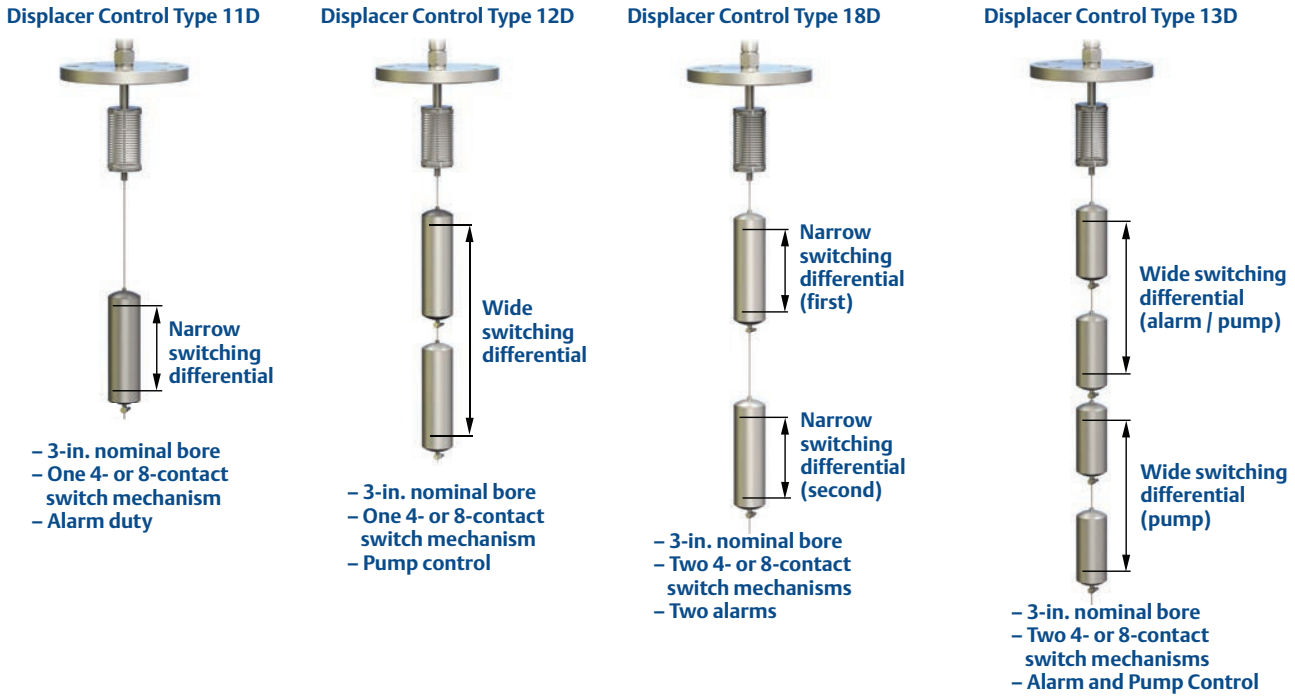

Operation principles

The displacer element, made of 316 stainless steel, is suspended on a stainless steel cable from a Nimonic 90 spring. The element is always heavier than its equivalent volume of the liquid in which it is to operate, and so will extend the tension spring at all times. In free air, the spring will be extended to a known length, controlled by a mechanical stop to prevent overstressing. Fixed to the spring is the rod and magnet assembly, free to move up and down as the spring extends or contracts.

As liquid rises to cover the displacer element, a buoyancy force is created equal to the weight of the liquid displaced. This force, in effect, is seen by the spring as a reduction in weight, causing the spring to contract. The spring contraction moves the magnet upwards and actuates the switch mechanism.

On a falling liquid level, the displacer element is uncovered and the spring sees an increasing effective weight, causing the spring to extend and move the magnet downwards to re-set the switch mechanism.

This simple principle can be refined to operate a single switch over a very wide differential (12D arrangement) by providing the buoyancy force from two elements instead of just one.

Two-switch-mechanism models are available for either two-alarms duty with two narrow differentials (18D arrangement) or for pump control/alarm duty with appropriate differentials (13D arrangement).

In all cases, because the elements are suspended on a cable, switching or control levels can be several metres below the mounting flange, and are fully field adjustable by re-setting the elements on the cable. The standard cable length is 3 m but can be cut to a shorter length (see "Dimensional Drawings" on page 110 for minimum lengths).

Mobrey switch mechanisms and ratings

Each Mobrey switch mechanism has flying leads which are factory-wired to the ceramic terminal blocks (in the enclosure) for **SPST (SPCO) relay** operation, as shown in Figure 4. For **DPDT (DPCO) relay** operation, the installer must common any one pair of A and B wires in the terminal block for each of the two sets of mechanisms.

Table 6. Mobrey switch mechanisms

Type	Purpose[1]
D4 or D8	General purpose switch mechanism.
X4 or X8	High current switch mechanism.
P4 or P8	Switch mechanism with gold-plated contacts for use in low-power or intrinsically safe circuits.
H4 or H8	Hermetically-sealed mechanism with gold-plated contacts. All moving parts and contacts are enclosed is an inert gas-filled stainless steel enclosure. Suitable for use in low temperatures, contaminated atmospheres, and intrinsically safe circuits.

(1) Switches must not be used for the direct starting of motors.

Figure 4. Mobrey switch mechanisms

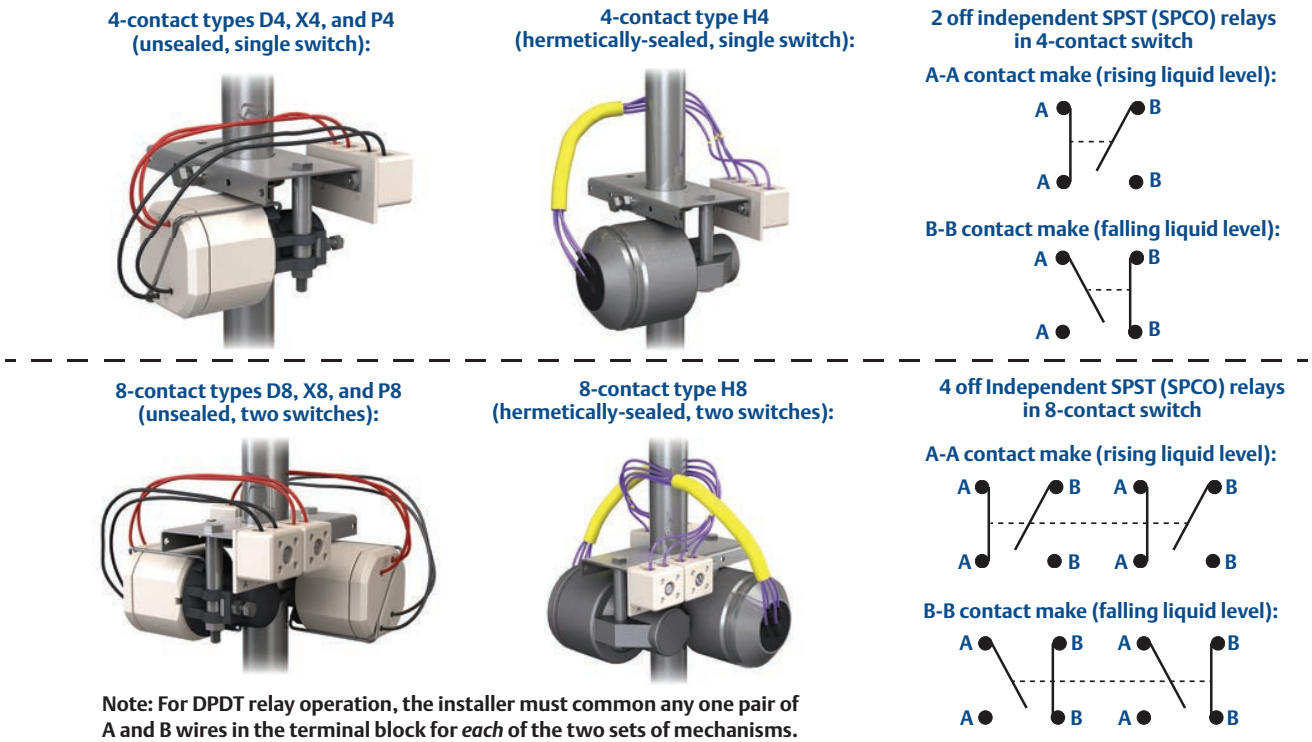

Note: For DPDT relay operation, the installer must common any one pair of A and B wires in the terminal block for *each* of the two sets of mechanisms.

Table 7. Electrical ratings for Mobrey switch mechanisms

Type	Maximum wetside temperature [1]	Low temperature use	AC maximum values			DC maximum values			
			VA	Volts	Amps	Watts	Volts	Residual amps	Inductive amps
D4 or D8	400 °C	No	2000	440	5	50	250	5	0.5
X4 or X8	250 °C	No	2000	440	10	50	250	10	0.5
P4 or P8 [2]	400 °C	No	6	250	0.25	3.6	250	0.25	0.1
H4 or H8 [3]	250 °C	-50 ºC	2000	440	5	50	250	5	0.5

(1) See also ordering information tables on pages 98, 100, and 102 for further operating temperature limits.
(2) The gold plating on the contacts of P4 and P8 switch mechanisms may be permanently damaged if the mechanisms are used to switch circuits with values greater than those shown above.
(3) The gold plating on the contacts of H4 and H8 switch mechanisms may be permanently damaged if the mechanisms are used to switch circuits with values greater than those shown for P4 and P8 above.

Mobrey switch enclosures

Figure 5. Mobrey switch enclosures

Weatherproof NEMA 4 / IP66 enclosures (base and cover) with tubes and unions

Flameproof and explosion-proof enclosures (base and cover) with tube and unions

Weatherproof NEMA 4 / IP66 enclosures

- Aluminium alloy base and drawn steel cover (code “N”)
- Type R**N: Fixed switch
- Type S**N: up to 94 mm switch point adjustment
- Type L**N: up to 194 mm switch point adjustment

Flameproof and explosion-proof enclosures

- Aluminium alloy base and cover (code “A”)
- Cast iron base and cover (code “I”)
- Type R**A or R**I: Fixed switch
- Type S**A or S**I: up to 94 mm switch point adjustment
- These enclosures also have a weatherproof rating to NEMA 4 / IP66

Conduit entries

- Enclosures supplied with 4-contact switch mechanisms have a single 1-in. NPT conduit entry
- Enclosures supplied with 8-contact switch mechanisms have two 1-in. NPT conduit entries.
- Weatherproof NEMA 4 / IP66 enclosures with 8-contact switches are supplied with a cast iron base instead of the aluminium alloy base, and have two 1-in. conduit entries.

Tube and unions

- 316 stainless steel throughout
- Welded construction with additional swaging technique to ensure maximum integrity
- Individually pressure tested to 150 bar (operating pressure is limited by the float or flange specified)

Paint Finish:

- Black stove paint
- Epoxy paint finishes available on request

Mobrey vertical chambers

The Mobrey vertical chamber range is the result of many years of experience in designing and manufacturing chambers in accordance with international codes.

The self-contained chamber is for externally mounting the Mobrey range of vertical level switches to a vessel. Externally mounting the level switch in a chamber means it can be isolated for routine maintenance while keeping the plant operational. It is also useful for in-tank restrictions that do not allow mounting of the level switch in a vessel

Table 8. Chamber types and construction materials

Bottle construction	Flanged construction
■ Stainless steel option: code BS ■ Carbon steel option: code BC ■ Float is sealed inside chamber during manufacture ■ Side-and-bottom or Side-and-side process connection orientations (see Table 9)	■ Stainless steel option: code XS ■ Carbon steel option: code XC ■ Float may be removed from chamber for maintenance or inspection ■ Side-and-bottom or Side-and-side process connection orientations (see Table 9)
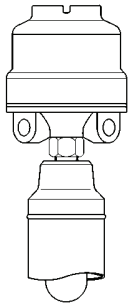	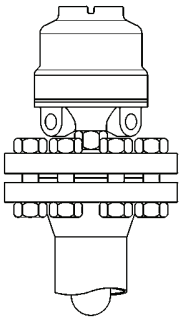

Table 9. Process connection orientation

Style 1: Side-and-bottom (Process Connection Orientation code C)	Style 2: Side-and-side with 1-in. NPT drain (Process Connection Orientation code B)
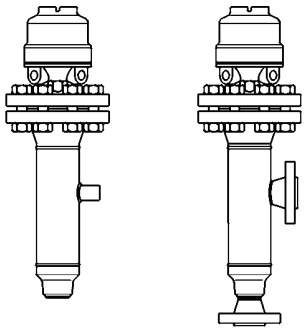	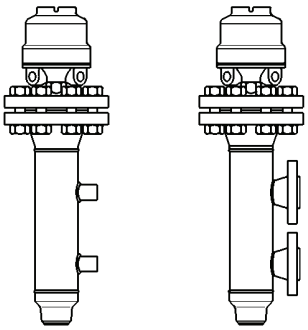
■ See page 112 for chamber dimensions, operating levels, and technical data.	

Quality standards

Mobrey Vertical Level Controls are manufactured to the highest standards of quality with only certified materials: BS EN 10204: 2004-3.1. Design of Mobrey chambers is in accordance with ASME B31.3. Relevant chambers are supplied CE marked and fully compliant with the Pressure Equipment Directive (97/23/EC).

Weld procedures approved to EN ISO 15614-1 and ASME IX, welders approved to BS EN 287-1. Circumferential and set-on branch welds are full penetration welds, with visual inspection in accordance with ASME B31.3 “normal service” requirements and our company standard 417.

All pressure retaining assemblies are hydrostatically pressure tested to a minimum of 1.43 × maximum working pressure or to flange standard requirements.

Radiography or other NDT techniques can be accommodated provided that they are specified at time of order entry.

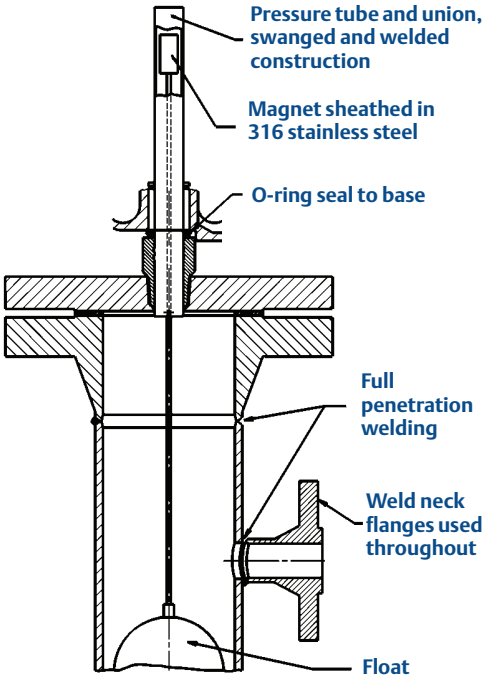

Inspection

Whilst Rosemount Measurement employ inspectors in house, unconnected with production, customers frequently ask for outside inspection. We are happy to accommodate nominated inspectors if agreed at order entry.

Some specifications require a quality control plan detailing inspection points and hold points. Rosemount Measurement will produce these QC plans for customer approval if agreed at order entry.

Table 10. Pressure ratings (bar)

Material	Carbon steel: A105			Stainless steel: 316L		
	20 ºC	250 ºC	400 ºC	20 ºC	250 ºC	400 ºC
ASME B16.5 Class 150	19.6	12.1	6.5	15.9	10.5	6.5
ASME B16.5 Class 300	51.1	41.9	34.7	41.4	27.5	24.3
ASME B16.5 Class 600	102.1	83.9	69.4	82.7	54.9	48.6

Table 11. Construction materials

	Carbon steel chamber	Stainless steel chamber
Chamber tube	ASTM A106 grade B	ASTM A312 TP316L
Top casting	ASTM A216	-
Top/bottom caps	ASTM A105	ASTM A182 F316L / A403 WP316L
Top cover	ASTM A105	ASTM A182 F316L
Flanges/fittings	ASTM A105	ASTM A182 F316
Studs	ASTM A193-B7	ASTM A320-L7
Nuts	ASTM A194-2H	ASTM A194 Grade 7+S3
Standard carbon steel chamber temperature range is –10 to +400 °C. Stainless steel chamber temperature range is –101 to +400 °C.		

Options

- Low temperature carbon steel
- Process connections to specification
- Duplex UNS31803
- Ratings up to ASME Class 2500
- Cr. mo. steels
- 3.1 identifiable certification
- N.A.C.E. requirements
- N.D.T. to your specifications
- Vent and drain connections

Dimensional Drawings

Displacer-type dimensions

Note that the minimum specific gravity requirement varies by displacer type and switching mechanism type.
Dimension S is the adjustable distance for the upper switching point level. Dimension E is the switching differential.

Table 12. Displacer-type dimensions

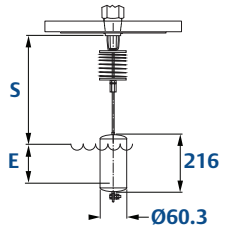

Type 11D (one 4- or 8-contact switch mechanism and narrow switching differential)

- Specify for alarm duty
- Switching point level can be changed by simply moving the displacer up or down the cable

	4-contact switches (D4, P4. X4. and H4)				8-contact switches (D8, P8, X8, H8)		
S.G.	0.6	0.75	1.0	1.2	0.75	1.0	1.2
S (minimum)	315 mm	335 mm	365 mm	380 mm	275 mm	320 mm	340 mm
E	90 mm	70 mm	60 mm	55 mm	135 mm	105 mm	90 mm

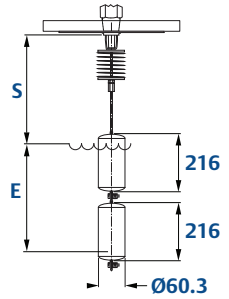

Type 12D (one 4- or 8-contact switch mechanism and wide switching differential)

- The two displacer elements are positioned at any point on the cable to correspond to the switching point level required. Should the liquid level drop to the **lower displacer element**, the switch mechanism is actuated and starts (or stops) a pump. When the liquid rises to the **upper displacer element**, the switch mechanism is again actuated to stop (or start) the pump.

	4-contact switches (D4, P4. X4. and H4)				8-contact switches (D8, P8, X8, H8)			
S.G.	0.5	0.8	1.0	1.2	0.75	0.8	1.0	1.2
S (minimum)	415 mm	430 mm	430 mm	425 mm	390 mm	390 mm	400 mm	400 mm
E	165 mm	110 mm	95 mm	80 mm	205 mm	200 mm	165 mm	140 mm

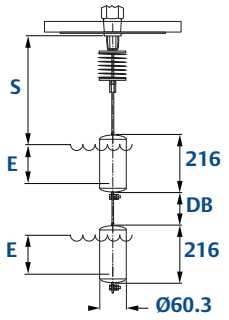

Type 18D (two 4- or 8-contact switch mechanisms and two narrow switching differentials)

- The two displacers elements are positioned **apart** to form two separate switching (alarm) point levels. This arrangement is typical for a sump application.

	4-contact switches (D4, P4. X4. and H4)				8-contact switches (D8, P8, X8, H8)		
S.G.	0.6	0.8	1.0	1.2	0.8	1.0	1.2
S (minimum)	390 mm	385 mm	375 mm	365 mm	355 mm	350 mm	345 mm
E	90 mm	70 mm	60 mm	55 mm	135 mm	105 mm	90 mm
Dead band	200 mm	230 mm	255 mm	310 mm	165 mm	215 mm	250 mm

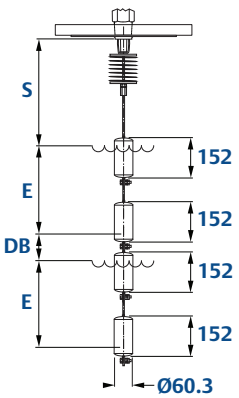

Type 13D (two 4- or 8-contact switch mechanisms and wide switching differential)

- A pump is controlled between the **middle** and the **lower** displacer elements positioned on the cable at the required levels. Should the level rise to the **upper** displacer element, this actuates the upper alarm switch which remains actuated until the level drops to the middle displacer element. Alternatively, the upper switch could control a second pump.

	4-contact switches (D4, P4. X4. and H4)				8-contact switches (D8, P8, X8, H8)		
S.G.	0.6	0.8	1.0	1.2	0.8	1.0	1.2
S minimum	390 mm	385 mm	375 mm	365 mm	355 mm	350 mm	345 mm
E	135 mm	110 mm	95 mm	80 mm	200 mm	145 mm	140 mm
Dead band	220 mm	255 mm	285 mm	310 mm	165 mm	215 mm	250 mm

Float-type dimensions

Table 13. Direct Mounting Float Type Dimensions

Float Type for 3-in. Nominal Bore Mounting: 11F	Floats Types for 4-in. Nominal Bore Mounting: 12F, 13F, 14F, and 17D
For enclosure dimensions, see Table 14 on 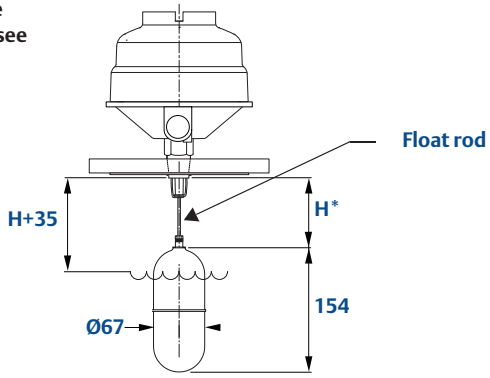 *The float rod may be shortened	For enclosure dimensions, see Table 14 on 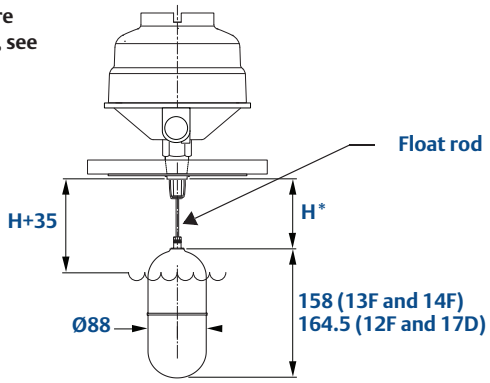 *The float rod may be shortened

Switch Enclosure	11F			Maximum Wet Switching Differential	12F 13F 14F 17D			Maximum Wet Switching Differential
	Minimum H	Maximum H	Switch Adjustment		Minimum H	Maximum H	Switch Adjustment(1)	
R**N R**A R**I	155 mm	315 mm	None	20 mm (fixed)	155 mm	415 mm	None	20 mm (fixed)
S**N S**A S**I	155 mm	315 mm	Up to 94 mm	Up to 114 mm	155 mm	415 mm	Up to 94 mm	Up to 114 mm
L**N(2)	–	–	–	–	155 mm	415 mm	Up to 194 mm	Up to 214 mm

(1) For enclosures S*** and L***, the switch mechanism mount position can be adjusted (vertically on the pressure tube) to change the switching point where the primary permanent magnet in the float and rod assembly actuates the switch.

(2) The L**N enclosure is not available for the 11F, 17D, or any float level switches that are supplied with a chamber.

Dimensions of switch enclosures

Table 14. Dimensions of switch enclosures

Weatherproof enclosures R**N, S**N, L**N	Hazardous area enclosures R**A, R**I, S**A, S**I
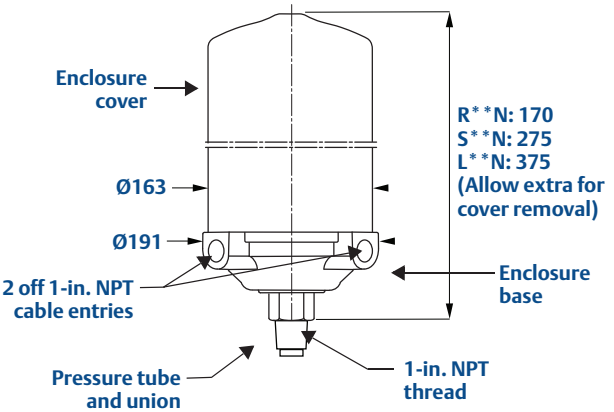 Dimensions for bases with a single 1-in. NPT cable entry are the same.	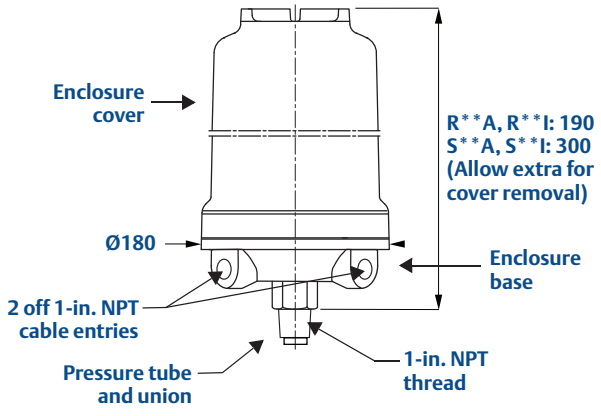 Enclosure type S**I has a different cover look (Figure 5 on page 107) but the dimensions shown here are the same. Dimensions for bases with a single 1-in. NPT cable entry are the same.

Chambers with vertical level switches fitted

Table 15. Chamber dimensional and operating level data

Style 1: Side-and-Bottom

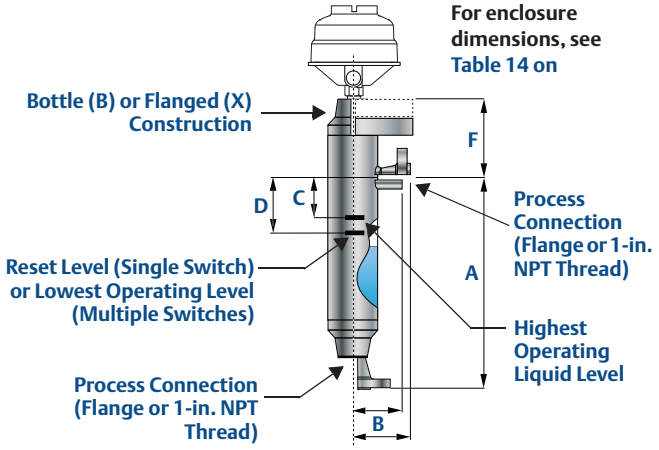

Style 2: Side-and-Side

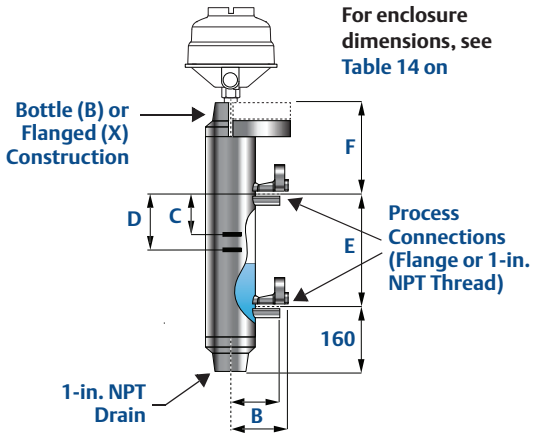

Process Connections	A		B (1)	C(2)	D (2)		E		F	
	'R' Enclosure	'S' Enclosure	Chamber Type BC/Others		Single Switch 'R' Enclosure	Multi Switch 'S' Enclosure	Single Switch 'R' Enclosure	Multi Switch 'S' Enclosure	Chamber Type	
									BC/BS	XC/XS
1-in. NPT (side/bottom)	300	385	76/95	50	70	164	–	–	48/160	225
1-in. NPT (side/side)	–	–	95	50	70	164	271	356	160	225
1-in. 150	356	441	110	50	70	164	271	356	160	225
1-in. 300	356	441	117	50	70	164	271	356	160	225
1-in. 600	356	441	123	50	70	164	271	356	160	225
1½-in. 150	356	441	115	50	70	164	271	356	160	225
1½-in. 300	356	441	121	50	70	164	271	356	160	225
1½-in. 600	356	441	126	50	70	164	271	356	160	225
2-in. 150	356	441	112	50	70	164	271	356	160	225
2-in. 300	356	441	118	50	70	164	271	356	160	225
2-in. 600	356	441	129	50	70	164	271	356	160	225
Operating levels: Type 17D float in any chamber										
Operating S.G.	0.4	0.5	0.6	0.7	0.8	0.9	1.0	1.1	1.2	
Dimension C	65	73	82	91	100	109	118	127	136	
Dimension D	118	122	127	132	137	141	147	152	156	

Note: All dimensions are in mm. See Table 3 on page 102 for explanation of order codes R, S, BC, BS, XC, and XS.

(1) The B dimension given is for a 4-in. Nominal Bore (NB) chamber (for 12F, 13F, 14F, and 17D floats). For a 3-in. NB chamber (11F float), subtract 13 mm.

(2) D - C = Wet switching differential (maximum)

The Emerson logo is a trademark and service mark of Emerson Electric Co.
Rosemount is a registered trademark of Rosemount Inc.
Mobrey is a registered trademark of Rosemount Measurement Ltd.
All other marks are the property of their respective owners.
Standard Terms and Conditions of Sale can be found at www.rosemount.com\terms_of_sale

© 2015 Rosemount Measurement Limited. All rights reserved.

Emerson Process Management
Rosemount Measurement Ltd.
158 Edinbugh Avenue,
Slough, Berks., SL1 4UE, UK
Tel +44 (0)1753 756600
Fax +44 (0)1753 823589
www.mobrey.com

Emerson Process Management
Rosemount Inc.
8200 Market Boulevard
Chanhassen MN 55317 USA
Tel (USA) 1 800 999 9307
Tel (International) +1 952 906 8888
Fax +1 952 906 8889

mobrey

EMERSON™
Process Management

Product Data Sheet
February 2015
IP400

Mobrey Dry Products

Level Measurement and Control

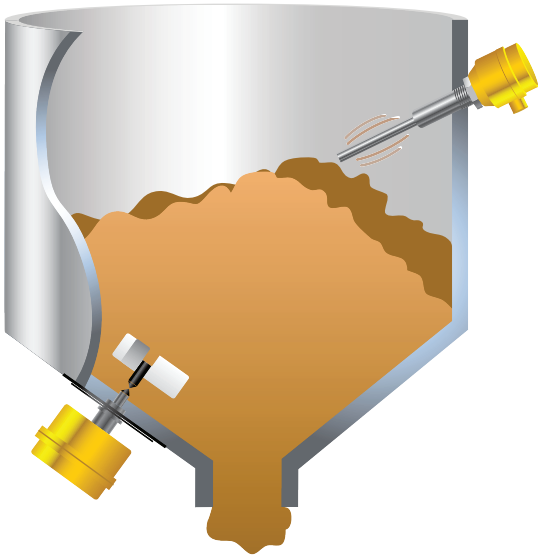

- The Mobrey product range provides reliable point level detection in a variety of dry solid applications
- The Mobrey Series PLS is a paddle rotating level switch that detects high or low levels of most free-flowing bulk solids and powders
- The Mobrey Series VLS vibrating rod level switch has a single probe design that eliminates the clogging and ridging problems associated with forks

mobrey

EMERSON™
Process Management

Overview of the Dry Products Level Switches

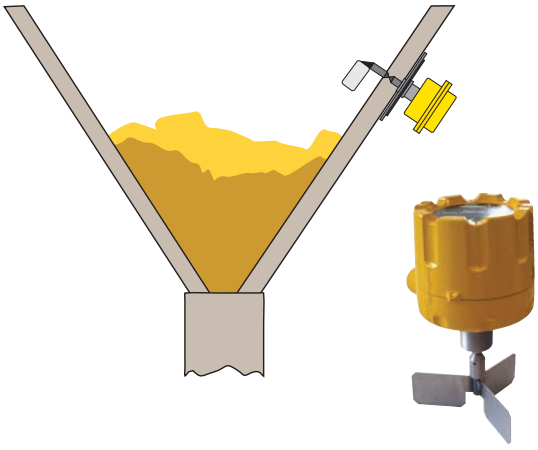

Series PLS paddle level switch

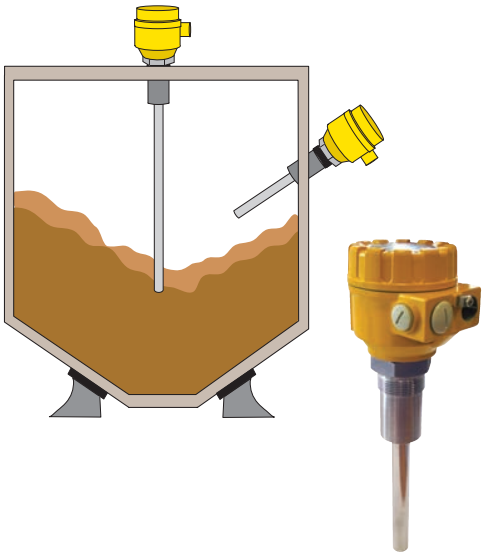

Series VLS vibrating rod level switch

Measurement principle

The measurement and control of dry products is important in all industries, from mining through to fine chemicals. Such is the diversity of product to be measured, that no single instrument is capable of reliable operation in all materials.

Mobrey products offer a range of technologies to ensure that users are able to select the most appropriate instrument for the application. Table 1 on page 117 is a guide to selecting a proven and reliable Mobrey product for your application.

Series PLS paddle level switch

The paddle switch may be used as either a high or low level limit switch. It is easily mounted through a vessel wall. A small electric motor drives a paddle which rotates freely in the absence of material.

When the paddle is impeded by the presence of material, a microswitch actuates an alarm signal. As soon as the paddle is completely stopped from rotating, power to the motor is cut, thus extending motor life. After the material level falls, the motor is returned to its normal position and the paddle begins to rotate again.

Series PLS switches can be used with granular, pelletized, and powdered dry products. They may be used in high level applications with materials over 160 kg/m^3 and low or intermediate applications with materials over 80 kg/m^3.

Series VLS vibrating rod level switch

The vibrating rod level switch is the perfect solution for single point level switching in free flowing solids across a wide density range, from fine powders to grains. A single rod design provides the solution to tuning forks which may become blocked or bridged.

The vibration rod is energized and kept in resonance by an electronic circuit. When covered by material, the damping of the vibration is detected by the electronics which initiate the switching of the output relay after a built-in programmable time delay.

Contents

Overview of the Dry Products Level Switches . . page 116
Mobrey Series PLS Ordering Information . . . . . page 118
Mobrey Series VLS Ordering Information . . . . . page 120
Technical Specifications . . . . . page 122
Dimensional Drawings . . . . . page 123

Table 1. Product selection guide

Point level switches				
	Paddle PLSK	Paddle PLSH	Vibrating rod VLSK	Vibrating rod VLSH
Duty				
High level alarm	■	■	■	■
Low level alarm	■	■	❑	❑
Material				
Powder	■	■	■	■
Granular	■	■	■	■
Pellets	■	■	■	■
Aggregate	■	■		
Material density				
Very low (1)	■	■	❑	❑
Low (2)	■	■	■	■
Medium (3)	■	■	■	■
High (4)	■	■	■	■
Very high (5)	■	■		
Material moisture				
Low	■	■	■	■
High				
Material coating				
Minimal	■	■		
Heavy build-up				
Corrosive				
Low	■	■	■	■
High			■	■
Installation				
Vertical (top)	■	■	■	■
Horizontal (side)	■	■	■	■
Temperature				
Ambient	■		■	■
Low (to –20 °C)	■		■	■
High (to +110 °C)		■	■	
Pressure				
Atmospheric	■	■	■	■
Low 2 bar	■	■	■	■
Medium 10 bar			■	■
Atmosphere				
Dusty	■	■	■	■
Steamy			❑	❑
Vibration				
Low (2)	■	■	■	■
High (4)	■	■		

Recommended ■ Possible ❑ Not recommended □

(1) Very low density examples (up to 100 kg/m^3) include powdered carbon (80), bread crumbs (96), and polythene flakes (95).

(2) Low density examples (100 to 250 kg/m^3) include soap flakes (160), ground cork (160), charcoal (208), and sawdust (210).

(3) Medium density examples (250 to 1000 kg/m^3) include bran (256), rolled oats (304), powdered milk (450), flour (596), grain (600 to 800), and granulated sugar (849).

(4) High density examples (1000 to 2000 kg/m3) include soot (1024), coal (1100), fine salt (1201), cement (1506) and dry sand (1602).

(5) Very high density examples include gravels (2000 to 2500), aggregates (2000 to 2500), earth (2000), and slag (2100).

Mobrey Series PLS Ordering Information

Table 2. Mobrey Series PLS ordering information

★The Standard offering represents the most common options. The starred options (★) should be selected for best delivery.
The Expanded offering is subject to additional delivery lead time.

Model	Product Description	
PLS	Paddle Level Switch series	
Model		
Standard		Standard
K	Standard model, 2 x SPDT alarm relays	★
H	High temperature standard model, 2 x SPDT alarm relays	★
P	Failsafe Safepoint model with fault relay and 1 x SPDT alarm relay	★
T	High temperature failsafe Safepoint model with fault relay and 1 x SPDT alarm relay	★
Mounting		
Standard		Standard
B1	R 1½" BSPT mounting (except high temperature)	★
N1	1¼" NPT mounting (all models)	★
Housing		
Standard		Standard
3	Aluminium alloy housing	★
Voltage		
Standard		Standard
0	115 Vac motor voltage	★
1	240 Vac motor voltage	★
2	24 Vdc motor voltage	★
Approvals		
Standard		Standard
A	ATEX Dust approval	★
Z	No hazardous area approvals	★
Typical Model Number: PLSK B1 3 1 Z (Order paddles and accessories separately)		

Table 3. Paddles and accessories for Mobrey Series PLS

Paddle selection		Scimitar	Single vane	3 Vane std	3 Vane large	2 Vane	4 Vane	Triangular	Belt Vane
Order part no.		P4193	P4145	P4146	P4141	P4135	P4156	P4144	P4137
Application									
Heavy material >2000 kg/m^3 >40 mm Ø	high								■ *1
	low								■ *1
Heavy material >2000 kg/m^3 <40 mm Ø	high		■ *1			■ *1	■ *1		
	low		■ *1			■ *1	■ *1		
Medium material 250 kg/m^3 to 1000 kg/m3	high	■		■			■	■	
	low	■	■	■			■	■	
Light material up to 250 kg/m3	high	■			■			■	
	low	■			■			■	
Mounting		Insertable	Insertable	Plate or flange	Plate or flange	Plate or flange	Plate or flange	Plate or flange	Plate or flange
Notes		*1 Flexible coupling required					■ = Recommended		

Flexible coupling (P3335)

The flexible coupling works to absorb heavy loads, side loads and loads caused by product surges. A flexible coupling should always be used in top mount installations where a solid shaft extension is used.

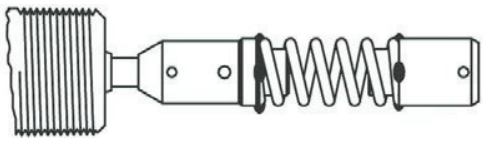

Solid (rigid) shaft extensions (P1175-2/****mm)

Many top mount installations require that the paddle extends into the vessel to a pre-determined level. Solid shaft extensions in stainless steel are available to customer order up to 1800 mm in length. Multiple sections can be supplied to achieve lengths of up to 3600 mm. Always specify a flexible coupling and a shaft guard with a solid shaft extension.

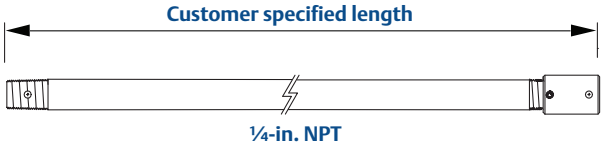

Shaft guard (P1174-2/****mm)

A stainless steel shaft guard should be specified when a solid shaft extension is required. The shaft guard should be ordered as the same length as the shaft extension. Maximum length is 1800 mm for lengths of up to 3600 mm, and multiple sections can be supplied complete with assembly coupling. Contact sales office for details.

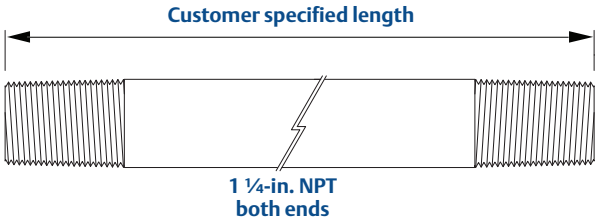

Shaft-guard coupling (P0038)

If it is necessary to use more than one shaft-guard in a single installation, they can be screwed together using shaft-guard couplings.

Flexible shaft extension (P1176-2)

Alternatively, a 2000 mm stainless steel flexible cable extension is available which may be cut to length on site and eliminates the need for the flexible coupling and shaft guard.

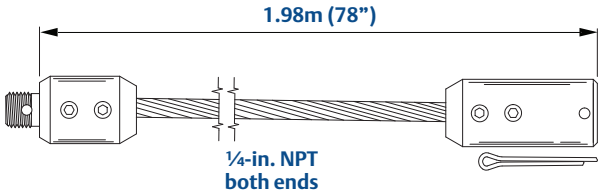

Mounting plate (see below for detail)

Half coupling: P0112; Full coupling: P0113

A mounting plate allows mounting to a curved or flat surface and is particularly advantageous if the paddle to be used is not an insertion type.

Two types are available: (Note: use only with NPT thread mounting paddle switches)

Full coupling (P0113) in stainless steel is necessary for use in top -mount applications where a shaft extension and shaft guard is specified. (Included as standard on high temperature option.)

Half coupling (P0112) in stainless steel for use in side-mount applications.

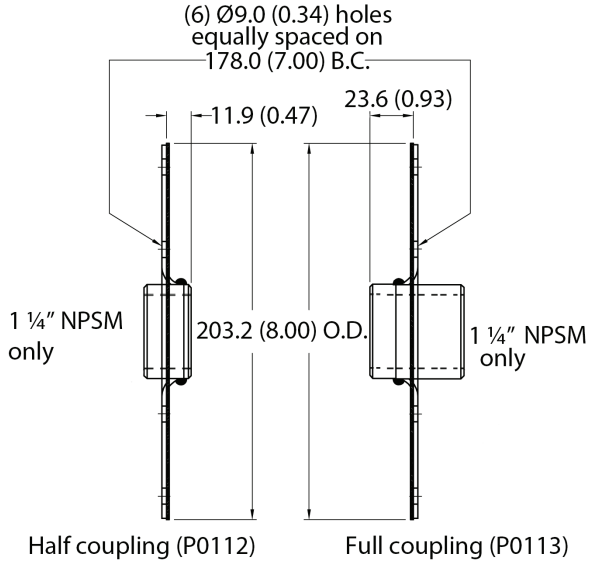

Mobrey Series VLS Ordering Information

Table 4. Mobrey Series VLS Ordering Information

★The Standard offering represents the most common options. The starred options (★) should be selected for best delivery.

The Expanded offering is subject to additional delivery lead time.

Model	Product Description	
VLS	Vibrating Rod Level Switch series	
Model		
Standard		**Standard**
K	Standard model with 1 x SPDT alarm relay	★
H	High temperature model with 1 x SPDT relay	★
Mounting		
Standard		**Standard**
B	R 1½-in. BSPT mounting	★
N	N1½-in. NPT mounting	★
Insertion Length		
Standard		**Standard**
1	Standard length rod, 207 mm insertion length	★
3	Extended rod, 300 to 3000 mm insertion length	★
4	Cable extended, 1000 to 20000 mm insertion length	★
Housing		
Standard		**Standard**
3	Aluminium Alloy housing, powder coated	★
9	As code 3, but with Remote Electronics	★
Voltage		
Standard		**Standard**
1Z	20 - 255V ac / 20 - 255V dc, no hazardous area approval	★
5A	20 - 250V ac / 20 - 50V dc, ATEX Dust Certification II 1/2 D	★
Special		
Standard		**Standard**
/****	Extension length (rod, cable) * see note	★
Typical Model Number: VLSK B1 3 1Z		

VLS Series options

Sensitivity selection

Bulk materials vary greatly in their characteristics. The VLS will operate in bulk materials with density over 50 kg/m^3 - the user must however set the sensitivity selection switch to either LOW for products with density less than 100 kg/m^3 or to HIGH for products with density greater than 1000 kg/m^3.

Failsafe operation

Each VLS may be set to either failsafe high or failsafe low using a switch in the electronics housing.

Side mounting

Ideal for use as a failsafe high level switch. When used in a low level application, it is desirable to protect the probe from excessive pressure exerted by the medium and from direct impact when the silo is being filled. A simple shield mounted above the probe is sufficient.

Top mounting

Either in standard length or extended length, mounted vertically in the silo. The cable extended probe which has a length of tough stainless steel cable between probe and mounting point, is ideal for very tall silos.

Installation examples

Granular material

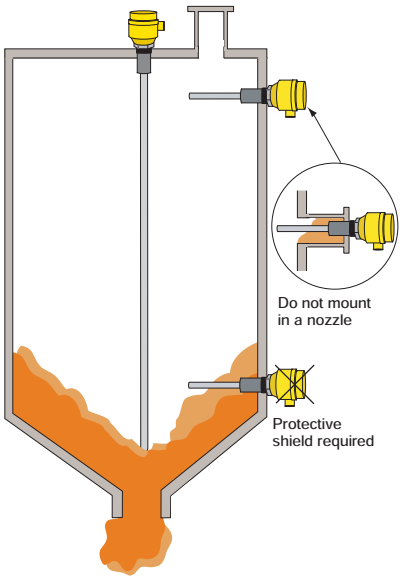

Powders

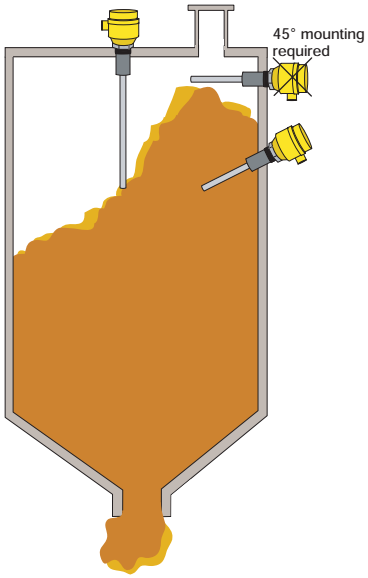

	High level	Low Level
Standard	Side mount	Side or bottom mount
Pipe extended	Top mount	Side or bottom mount
Cable extended	Top mount	Top mount

Technical Specifications

Technical specifications for Series PLS

Applications

- Free flowing dry products, very low to very high density

Power supply

- Voltage order option code 0: 115 Vac ±15%, 50/60 Hz
- Voltage order option code 1: 230 Vac ±15%, 50/60 Hz
- Voltage order option code 2: 24 Vdc ±15%

Power consumption

- 4 W maximum

Output

- Standard models: 2 x SPDT control relays, 15A at 250 Vac
- Safepoint models:
  1 x SPDT control relay, 5A at 250 Vac
  1 x SPDT fault relay, 5A at 250 Vac

Conduit connection

- 2 x $^{3}/_{4}$-in. NPT (NPT models) or 2 x M20 (BSPT models)

Process temperatures

- –40 to 149 °C (Standard models)
- –40 to 121 °C (Safepoint models)
- –40 to 399 °C (High temperature models)

Ambient temperatures

- –40 to 93 °C (Standard models)
- –40 to 65 °C (Safepoint models)

Operating pressures

- 2 bar maximum

Wetside material

- Type 304 SST

Housing material

- Aluminium alloy, powder paint coated

Housing rating

- IP66

Weight

- Typical Standard model: approximately 4 Kg

Approvals

- ATEX II 1/2 D

Technical Specifications for Series VLS

Applications

- Free flowing powders and granules, Ø<10mm, low - high density

Power supply

- Voltage order option code 1Z: 20 - 255 Vac (50/60Hz) / 20 - 255 Vdc
- Voltage order option code 5A: 20 - 250 Vac (50/60Hz) / 20 - 50 Vdc

Output

- 1 x SPDT control relay, 8A at 250 Vac

Conduit connection

- 2 x ½-in. NPT (NPT models) or 2 x Pg16 (BSPT models)

Response time

- Selectable 2 or 5 seconds

Process temperatures

- –20 °C to +110 °C (standard models)
- –20 °C to +160 °C (high temperature models)

Ambient temperatures

- –20 °C to +60 °C

Operating pressures

- 10 bar maximum

Wetside material

- Type 316 stainless steel

Housing material

- Aluminium alloy, powder paint coated

Housing rating

- IP67

Weight

- Approximately 2 kg

Approvals

- ATEX II 1/2 D

Dimensional Drawings

Series PLS dimensions

Note: Dimensions are in inches (mm)

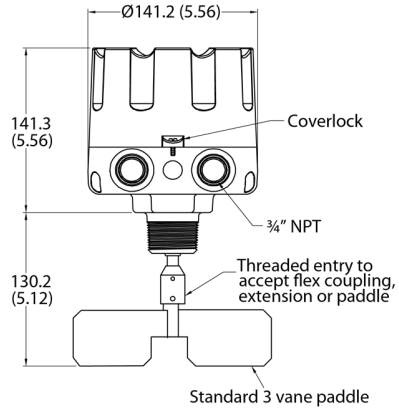

Series VLS dimensions

Note: Dimensions are in mm

Standard Version

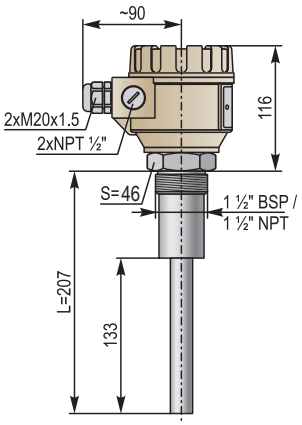

Pipe Extended Version

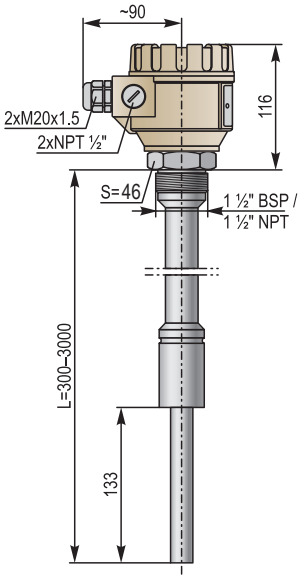

Cable Extended Version

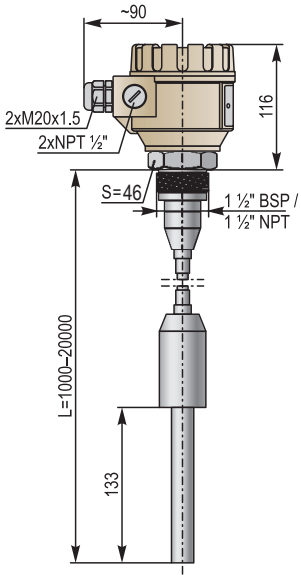

Product Selection
Contents

The Emerson logo is a trademark and service mark of Emerson Electric Co.
Mobrey is a registered trademark of Rosemount Measurement Ltd.
Rosemount is a registered trademark of Rosemount Inc.
All other marks are the property of their respective owners.
Standard Terms and Conditions of Sale can be found at www.rosemount.com\terms_of_sale

© 2015 Rosemount Measurement Limited. All rights reserved.

Emerson Process Management
Rosemount Measurement Ltd.
158 Edinbugh Avenue,
Slough, Berks., SL1 4UE, UK
Tel +44 (0)1753 756600
Fax +44 (0)1753 823589
www.emersonprocess.com

Emerson Process Management
Rosemount Inc.
8200 Market Boulevard
Chanhassen, MN 55317, USA
Tel (USA) 1 800 999 9307
Tel (International) +1 952 906 8888
Fax +1 952 906 8889

Product Selection
Contents

Ultrasonic continuous level transmitters and control units

MSP Series ultrasonic level transmitters

- Can be configured for liquid level, volume and open channel flow calculations, with a 4–20 mA / HART output
- Easy to install and set up using on-board programming, push buttons and built-in display
- Self-learning functionality to ignore false echoes
- Minimal maintenance - no moving parts and resistant to corrosion
- Accuracy unaffected by changes in density, dielectric and viscosity
- Built-in temperature compensation corrects for changes in ambient temperature
- May be combined with the Rosemount Smart Wireless THUM™ Adapter for a wireless solution
- Integral relays for alarm or control duties
- Flexibility of models to fit different markets, such as industrial/effluent treatment markets or exposed sites such as reservoirs, rivers or remote works

There are five models in the Mobrey ultrasonic level transmitter range. For guidance in choosing the correct model for your application, please see the selection guide on the next page.

MCU900 Series control units

- Provides intrinsically safe power to the transmitter, or any other 4-20mA / HART transmitter
- Application wizards to assist with the set-up of level, contents (volume), and open channel flow applications
- Pre-configured tank volume calculations for different tank shapes, and flow curves for most common weirs and flumes
- LCD display, 4–20 mA output, 5 x SPDT relay contacts, totalizer output for flow applications
- HART digital communication with transmitter
- Datalogging up to 7000 events
- May be combined with Rosemount Smart Wireless THUM Adapter for wireless solution

Picture:
(Front, left-to-right) MCU900 controllers, MSP900GH with optional mounting bracket kit fitted, MSP400RH, and MSP422 with optional flange accessory fitted;
(Back left-to-right) MSP900FH and MSP900SH with their standard mounting brackets fitted

Specification and selection guide for ultrasonic continuous measurement

Click on the model number to turn to the page with the product data sheet

		MSP422	MSP900RH	MSP900GH	MSP900SH	MSP900FH
Application	Level	●	●	●	●	●
	Level (occasional submersion)	○	○	○	●	●
	Distance	○	●	●	●	●
	Tank Volumes	○	●	●	●	●
	Open channel flow - flumes/weirs	○	●	●	●	●
	Strapping table 10 points	○	●	●	●	●
Range	1 to 11 ft. (0.3 to 3.3 m)	●	●	●	●	●
	1 to 26 ft. (0.3 to 8 m)	●	●	●	●	○
	1 to 36 ft. (0.3 to 11 m)	○	●	●	●	○
	1 to 40 ft. (0.3 to 12 m)	○	○	○	●	○
Certification	Intrinsically safe/hazardous area	○	○	●	●	●
Outputs	Relay 2 x SPST	○	●	○	○	○
	4–20 mA	●	●	●	●	●
	HART	○	●	●	●	●
	WirelessHART with THUM Adapter	○	●	●	●	●
Housing	Glass-filled nylon (plastic)	●	●	●	○	○
	UPVC (plastic)	○	○	○	●	●
Wetted material	PVDF (plastic)	●	●	●	○	○
	UPVC (plastic)	○	○	○	●	●
IP rating	IP66/67 Type 4X	●	●	●	○	○
	IP68 to 33 ft. (10 m)	○	○	○	●	●
Ambient temperature	–4 to 158 °F (–20 to 70 °C)	●	●	●	○	○
	–40 to 158 °F (–40 to 70 °C)	○	●	●	○	○
	–40 to 140 °F (–40 to 60 °C)	○	●	●	●	●
Process pressure	–3.6 to 44 psi (-0.25 to 3.0 bar)	●	●	●	●	●
Reference accuracy	±0.5% of range or ±0.2 in. (5 mm) [1]	●	●	●	●	●
	±0.25% of range or ±0.1 in. (2.5 mm) [1]	○	●	●	●	●

[1] *Whichever is the greater*

TABLE KEY: Available ● Not available ○

Ultrasonic sludge blanket monitoring and control

MSM400 – suspended solids density monitoring and control

- Continuous sludge discharge monitor for up to 15% suspended solid
- Rugged 316 stainless steel sensors for in-tank or pipe section mounting
- Bright local display of the measured value and statuses

Mobrey MSM400 Controller

- 4–20 mA/ HART output of measured value
- Two SPDT (single-pole-double-throw) relays for control and alarm indication purposes
- Comes complete with a range of user-selectable calibration settings for simple initial set-up
- Provides the automatic control sequence to start a pump or control a valve for sludge or settled product removal

MSM448 pipe section with sensors

- Dual-operating-frequency gap sensors, 1 MHz or 3.3 MHz
- Epoxy coated carbon steel with 316 stainless steel transducers
- The pipe is coated to minimize grease and debris build up, and typically monitors suspended solids during a tank de-sludge cycle

MSM433 tank-mountable sensor

- Dual-operating-frequency gap sensors, 1 MHz or 3.3 MHz
- Available in a range of sizes depending on the range of density to be measured
- The sensors are of welded 316 stainless steel construction with an IP68 submersible rating for the cable entry
- The sludge density is measured between the sensor fork gap

Picture (from left-to-right): MSM400 controller, MSM433 tank-mountable sensor, and the MSM448 pipe-section with sensors

Specification and selection guide for ultrasonic suspended solids measurement

		MCU200+433	MSM400+433	MSM400+448
Application	Sludge interface - point level	●	●	○
	Sludge density - in tank	○	●	○
	Sludge density - tank discharge	○	○	●
	Automatic de-sludge control	○	●	●
Certification	Intrinsically safe/hazardous area	○	●	●
Supply	24 Vdc	●	●	●
	110 / 230 V, 50 / 60 Hz	●	●	●
Outputs	Control / alarm relay SPDT	●	●	●
	Fault indication LED	●	○	○
	Dedicated fault relay SPDT	○	●	●
	4-20 mA	○	●	●
	HART	○	●	●
Sensor wetted material	316 Stainless steel	●	●	●
Sensor IP rating	IP68	●	●	●[1]
Process temperature	-40 to 122 °F (-40 to 50 °C)	●	●	●
	-40 to 158 °F (-40 to 70 °C)	○	○	●
Process pressure	Atmospheric	●	●	●
	145 psi (10 bar)	●	●	●
	1520 psi (105 bar)	●	●	○

[1] *IP68 rating requires optional SR potted junction box.*

TABLE KEY: Available ● Not available ○

Displacer continuous level measurement

Mobrey MLT100 level transmitter

The Mobrey MLT100 level transmitter is one of the most advanced displacer-based devices on the market, coupling the time proven buoyancy principle with state of the art electronics in an instrument of high reliability and stability.

The transmitter can be mounted directly into a vessel or may be externally mounted in a chamber to allow isolation for planned maintenance or in-situ calibration checks.

Special care has been taken in design to ensure a small mounting envelope is maintained, resulting in reduced weight and associated savings in mounting.

New MLT100 displacer level transmitter options

Following increasing demand from the petro-chemical market, the MLT100 displacer level transmitter is now available with a 316 stainless steel enclosure. The ATEX intrinsically safe certification has now been updated to include this new option. To complete the specification, the optional indicator is also available in a 316 stainless steel enclosure.

Pictures: Mobrey MLT100 Displacer Level Transmitter (threaded version) with a Rosemount 9901 chamber mounted on a vertical tank, and a flanged MLT100

Product Selection
Contents

Hydrostatic continuous level transmitter

Mobrey 9700 Series level transmitter

The 9700 Series hydrostatic electronic level transmitter range of tank volume transmitters from Mobrey provide the measurement solution where in-tank problems such as foaming, vapor layers and temperature gradients prohibit the use of other instrumentation.

The transmitters use a ceramic capacitive pressure sensor that measures the head of the liquid with an accuracy of ±0.1%. The sensor is ceramic because of the material's corrosion resistance and the transmitter is factory sealed and tested to IP68 for submersed duty and long-term stability.

The 9700 Series electronic pressure and level transmitter is designed to perform in the demanding conditions of today's level measurement applications.

For guidance in choosing the correct product for your application, please see the table on the next page.

9710C Application

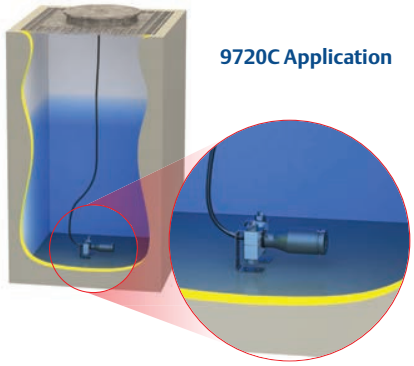

9720C Application

9780C Application

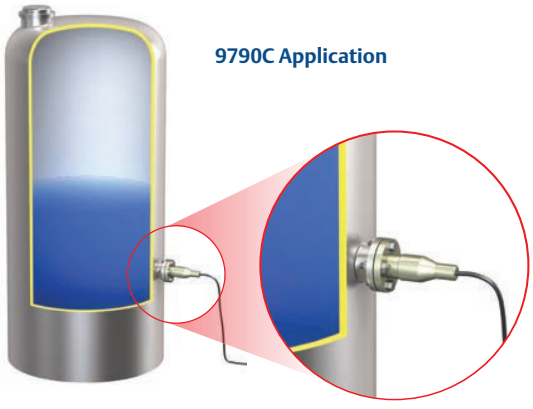

9790C Application

Specification and selection guide for the 9700 Series

Click on any model number to turn to the page with the product data sheet

		9710	9720	9780	9790
Installation	Cable suspended and submersible	●	○	○	○
	Clamped cable and submersible	○	●	○	○
	Pole mount and submersible	○	○	●	○
	Flanged and submersible	○	○	○	●
Certification	Non-certified version (non-hazardous area use only)	●	●	●	●
	CSA (Canada and USA)	●	●	●	●
Available measurements	Hydrostatic level	●	●	●	●
Configuration	Integral electronics	●	●	●	●
Output	4–20 mA	●	●	●	●
Process temperature	–4 to 140 °F (–20 to 60 °C)	●	●	●	○
	–4 to 194 °F (–20 to 90 °C)	○	○	○	●
Process pressure	Up to 656 ft. (200 m) hydrostatic level	●	●	○	●
Materials of Construction	316 stainless steel housing, ceramic capacitive sensor	●	●	●	●
	Aluminum bronze housing, ceramic capacitive sensor	●	●	●	●
	Polyurethane cable	●	●	●	●
	Flourinated ethylene polypropylene (FEP) cable	●	●	●	●
Process connections	Flanged	○	○	●	●
	Cable mount	●	●	○	○

TABLE KEY: Available ● Not available ○

Product data sheets index (*Continuous level*)

Ultrasonic continuous level transmitters and control units

Product Data Sheet: MSP422/MSP400RH/MSP900GH . . . . . page 133

Product Data Sheet: MSP900SH/MSP900FH . . . . . page 145

Product Data Sheet: MCU900 Series . . . . . page 157

Ultrasonic sludge blanket monitoring and control

Product Data Sheet: MSM400 . . . . . page 167

Displacer continuous level measurement

Product Data Sheet: MLT100 . . . . . page 175

Hydrostatic continuous level transmitter

Product Data Sheet: Mobrey 9700 Series . . . . . page 185

Product Data Sheet
February 2015
IP2045

Mobrey Ultrasonic

MSP422, MSP400RH, and MSP900GH Level Transmitters

- Non-contacting measurement with no moving parts
- Integral LCD and push-buttons as standard for on-site programming
- Continuous measurement of level or distance-to-surface.
- Volume or open channel flow calculations for the Mobrey MSP400RH and MSP900GH
- Two integral signal relays for the Mobrey MSP400RH
- Easy to install and configure
- Rugged metal or plastic housing. PVDF wetted material
- Two-wire direct current loop-powered

mobrey

EMERSON™
Process Management

Overview of the Mobrey MSP422/400RH/900GH

Mobrey MSP422

Mobrey MSP400RH

Mobrey MSP900GH

Measurement principle

The Mobrey MSP Series is a liquid level transmitter based on ultrasonic technology that is suitable for many liquid applications.

Ultrasonic pulse signals are transmitted and reflected from the liquid surface. The transmitter 'listens' for reflected signals (echoes) and measures the time-delay between transmitting and receiving. The distance to the liquid surface is automatically calculated using the computed time-delay.

An integral temperature sensor continuously measures the air temperature around the transmitter. It then computes the speed of sound in air, automatically compensating the Distance for temperature effects. The MSP400RH and MSP900GH have a Remote Temperature Sensor option.

The distance measurement can be sent through the 4–20 mA or HART® output.

Features and benefits

- Eliminates problems experienced with contacting instrumentation
- Simple set-up and operation
- Minimal maintenance after installed
- Low cost of installation and commissioning
- Process downtime minimized
- Non-contacting measurement with no moving parts
- Two integral signal relays
- Corrosion resistant PVDF wetted material
- Two-wire 24 V direct current loop-powered
- M20 x 1.5 conduit entries, single or dual depending on model
- Operating range to 36 ft. (11 m)
- Measures liquid height, distance to liquid, volume, or flow in open channels
- Simple push button programming
- Built-in LCD display
- Automatic temperature compensation

Contents

Overview of the Mobrey MSP422/400RH/900GH .... page 134
Mobrey MSP422 Level Transmitter ..... page 136
Mobrey MSP400RH Level Transmitter ..... page 136
Mobrey MSP900GH Level Transmitter ..... page 136
MSP Series Accessories ..... page 136
Specifications ..... page 137
Product Certifications ..... page 140
Dimensional Drawings ..... page 141

Special features

Advanced software features

- Learn routine (false echo registration)

  The transmitter can learn to ignore up to four false echoes caused by the pulse signal reflecting off obstructions, until the actual level is seen.

- Empty tank mapping

  When a tank is empty, the transmitter can learn to ignore up to four false echoes, without the need for user interaction.

- Present depth

  The bottom reference can be automatically set using a known user-entered depth.

- Set as empty

  When the tank is empty, the bottom reference can be automatically reset to the measured distance.

- Distance offset

  The distance to the surface can be adjusted by a user-entered positive or negative offset value.

- Level offset

  The level can be adjusted by a user-entered positive or negative offset value

- Bottom blanking

  The transmitter can be set to ignore an area of the tank bottom to avoid false echoes from obstructions.

Remote Temperature Sensor Option (For MSP400RH and MSP900GH)

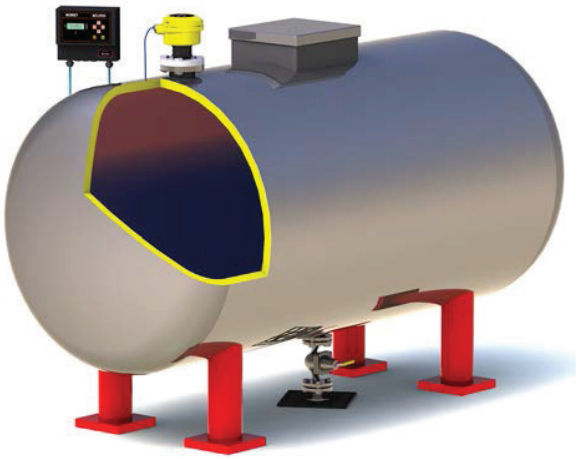

Level Measurement with a Mobrey MSP400RH Transmitter and a Mobrey MCU900 Series Control Unit

Applications

- Storage tank levels, open channel flow, effluent pits, reservoir level, buffer tanks, and more

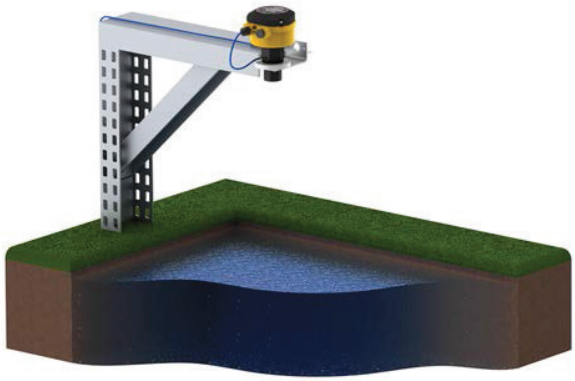

Open Channel Flow Measurement with a Mobrey MSP900GH Transmitter

Choosing the right model

- Each MSP Series transmitter has been designed for a specific purpose, as shown in the table here:

Transmitter Purpose	Model	Range
Simple level measurement	MSP422 MSP400RH	26-ft. (8 m) 36-ft. (11 m)
Level measurement and local relays	MSP400RH	36-ft. (11 m)
Level measurement in hazardous areas	MSP900GH	36-ft. (11 m)
Open channel flow or volume measurement	MSP400RH MSP900GH	36-ft. (11 m) 36-ft. (11 m)

Mobrey MSP422 Level Transmitter

Table 1. MSP422 ordering information

Model	Product Description
MSP422	Ultrasonic Level Transmitter 4–20mA
Process Connection	
N2(1)	2-in. NPT thread
B2(2)	2-in. BSPT thread
Wetted Material	
8	PVDF
Typical Model Number: MSP422 - B2 8	

(1) Choosing this option implies US (Imperial) units of measurement are required for the default configuration. The configuration can be changed on-site.

(2) Choosing this option implies Metric units of measurement are required for the default configuration. The configuration can be changed on-site.

Mobrey MSP400RH Level Transmitter

Table 2. MSP400RH ordering information

Model	Product Description
MSP400R	Ultrasonic Level Transmitter with 2 integral relays
Signal Output	
H	4–20 mA with HART communication
Process Connection	
N2(1)	2-in. NPT thread
B2(2)	2-in. BSPT thread
Wetted Material	
8	PVDF
Typical Model Number: MSP400R H - B2 8	

(1) Choosing this option implies US (Imperial) units of measurement are required for the default configuration. Configuration can be changed on-site.

(2) Choosing this option implies Metric units of measurement are required for the default configuration. Configuration can be changed on-site.

Mobrey MSP900GH Level Transmitter

Table 3. MSP900GH ordering information

Model	Product Description
MSP900G	Ultrasonic Level Transmitter for hazardous areas
Signal Output	
H	4–20 mA with HART communication
Process Connection and Approval	
A	2-in. BSPT thread, PVDF wetside, and ATEX approved Intrinsically Safe
Typical Model Number: MSP900G H - A	

MSP Series Accessories

Table 4. MSP Series accessories ordering information

Accessories	
MSP-FLG5	2-in. BSPT to PN16 DN50, PVC Flange
MSP-BRK3(1)	2-in. NPT Mounting Bracket
MSP-BRK2(1)	2-in. BSPT Mounting Bracket
MSP-RTP	Remote Temperature Sensor (Mobrey MSP400RH and Mobrey MSP900GH only)

(1) See "Dimensional Drawings" on page 141.

Specifications

General

Products

- Mobrey MSP422 Ultrasonic Transmitter:
  Level and Distance measurement
- Mobrey MSP400RH Ultrasonic Transmitter:
  Level, Distance, Content (Volume), and Flow measurement, with two integral signal relays
- Mobrey MSP900GH Ultrasonic Transmitter:
  Level, Distance, Content (Volume), and Flow measurement for hazardous locations

Measurement principle

- Ultrasonic, time-of-flight

Measuring performance

Measurement range

- Mobrey MSP422: 1 to 26 ft. (0,3 to 8 m)
- Mobrey MSP400RH: 1 to 36 ft. (0,3 to 11 m)
- Mobrey MSP900GH: 1 to 36 ft. (0,3 to 11 m)

Blanking distance (dead zone)

- 12 in. (0,3 m)

Level resolution

- Better than 0.06 in. (1 mm)

Level accuracy under reference conditions(1)

- MSP422:
  ± 0.2 in. (5 mm) for < 3.3 ft. (1 m),
  ± 0.5% of measured distance for > 3.3 ft. (1 m)
- MSP400RH and MSP900GH:
  ± 0.1 in. (2,5 mm) < 3.3 ft (1 m),
  ± 0.25% of measured distance for > 3.3 ft. (1 m)

Update interval

- Display: 500 ms
- Current Output: 200 ms

Display and configuration

Integral display

- 4/5 digit display for live measurement, and for configuration purposes

Output units

- For Level or distance-to-surface: m, ft, in, or none
- For Contents: l, m^3, gal, ft^3, or none
- For Flow:
  l/s, l/m, m^3/hr, gal/s, gal/m, ft^3/m (cfm), ft^3/hr, or none

Output variables

- MSP422: Level or distance-to-surface
- MSP400RH:
  Level (or distance-to-surface), Content (Volume), and Flow
- MSP900GH:
  Level (or distance-to-surface), Content (Volume), and Flow

Configuration tools

- Standard integral push-buttons with LCD
- Field Communicator
- Mobrey MCU900 Series Universal Control Unit

Electrical

Power supply

- Loop-powered (two-wire)
- Mobrey MSP422: 12 to 30 Vdc
- Mobrey MSP400RH: 12 to 40 Vdc
- Mobrey MSP900GH:
  12 to 40 Vdc (non-hazardous area),
  12 to 30 Vdc (hazardous area)

Earthing

- None required

Current output

- MSP422: Analog 4–20 mA
- MSP400RH and MSP900GH: Analog 4–20 mA, HART

Signal on alarm

- Low = 3.6 mA. High = 21 mA

Saturation levels

- Low = 3.8 mA. High = 20.5 mA

Relay output (MSP400RH)

- Two integral signal relays, SPST rated 1A @ 30 Vdc (inductive) and 2A @ 30 Vdc (resistive)

(1) Temperature: 68 °F (20 °C), Pressure: 1013 mbar (atmospheric pressure), Relative Humidity: 50%, calm and stable water surface.

Electrical parameters (MSP900GH)

- U_i = 30 V, I_i = 120 mA, P_i = 0,82 W, L_i = 108 μH, C_i = 0 nF

Cable entry

- Two M20 x 1.5 conduit entries for cable glands

Output cabling

- Single twisted-pair and shielded, min. 0,22 mm^2 (24 AWG), max. 1,5 mm^2 (15 AWG)

Physical specifications

Materials selection

- Emerson provides a variety of product with various product options and configurations including materials of construction that can be expected to perform well in a wide range of applications. The product information presented is intended as a guide for the purchaser to make an appropriate selection for the application. It is the purchaser's sole responsibility to make a careful analysis of all process parameters (such as all chemical components, temperature, pressure, flow rate, abrasives, contaminants, etc.), when specifying product, materials, options and components for the particular application. Emerson Process Management is not in a position to evaluate or guarantee the compatibility of the process fluid or other process parameters with the product, options, configuration or materials of construction selected.

Materials used in construction

Wet-side material

- PVDF

Body and cover material

- Glass-filled nylon

Cover seal

- Silicone rubber

Cover screws

- 316 Stainless Steel

Transducer body seal

- EPDM

Mechanical

Mounting thread size

- 2-in. NPT, or 2-in. BSP. Optional flange accessories available

Weight of transmitter

- MSP422: 2.0 lb (0,9 kg)
- MSP400RH: 2.2 lb (1,0 kg)
- MSP900GH: 3.1 lb (1,4 kg)

Measuring

Temperature compensation(1)

- MSP422: Automatic Integral temperature compensation
- MSP400RH: Automatic Integral temperature compensation. Optional remote temperature sensor for dynamic temperature compensation
- MSP900GH: Automatic Integral temperature compensation. Optional remote temperature sensor for dynamic temperature compensation

Environment

Ambient temperature(2)

- MSP422: –4 to 158 °F (–20 to 70 °C)
- MSP400RH: –40 to 158 °F (–40 to 70 °C)
- MSP900GH: –40 to 140 °F (–40 to 60 °C)

Process temperature

- MSP422: –4 to 158 °F (–20 to 70 °C)
- MSP400RH and MSP900GH: –22 to 158 °F (–30 to 70 °C)

Process pressure:

- –4 to 44 psi (–0,25 to 3,0 bar)

Ingress protection

- IP 66/67 (when using supplied cable gland/blanking plug)

Electromagnetic compatibility

- EN61326 (Class B)

Certifications

- CE-mark, FM, ATEX (dependent on order code)

(1) See Table 4 on page 136 for optional accessories.
(2) See page 140 onwards for approval temperature ranges.

Temperature and pressure ratings

The process temperature/pressure rating depends on the design of the transmitter in combination with the flange materials.

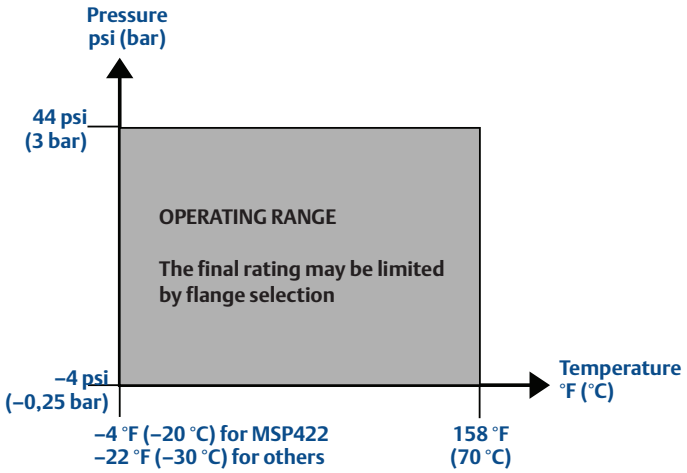

Process Temperature And Pressure Diagram For Mobrey MSP422, MSP400RH and MSP900GH

Load limitations

A Field Communicator requires a minimum load resistance of 250 Ohm within the loop in order to function properly. Communication with Mobrey MCU900 Series Control Unit does not require additional resistance. The maximum load resistance can be determined from these diagrams:

Non-Intrinsically Safe Installations

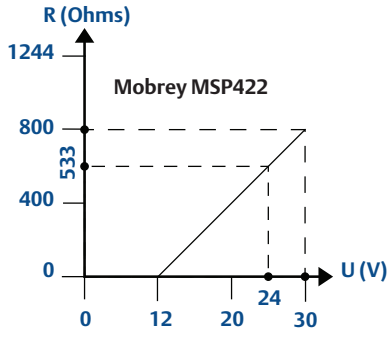

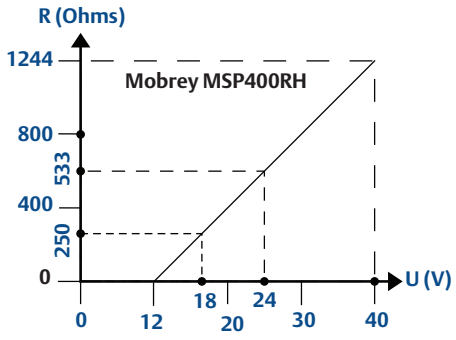

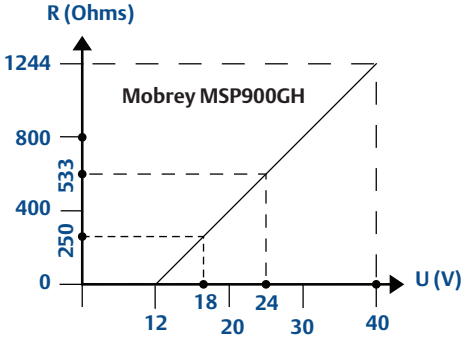

Intrinsically Safe Installations

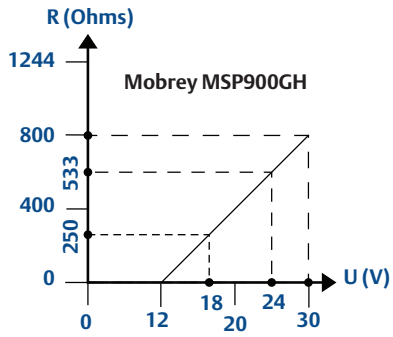

Note
R = Maximum Load Resistance
U = External Power Supply Voltage

Product Certifications

Approved manufacturing locations

- Rosemount Measurement Limited
  – Slough, United Kingdom

European directive information

The EC declaration of conformity certificate may be obtained by contacting your local sales office.

ATEX directive (94/9/EC)

- The MSP900GH complies with the ATEX directive

Pressure equipment directive (PED) (97/23/EC)

- The MSP Series is outside the scope of the PED directive

Electro magnetic compatibility (EMC) directive

- EN 61326-1:2006, EN 61326-2.3:2006

CE-mark

- MSP422 (EMC)
- MSP400RH (EMC)
- MSP900GH (EMC, ATEX)

Ordinary locations certification (Mobrey MSP422 and MSP400RH only)

American certification

Factory Mutual (FM) ordinary locations approval

Project ID: 3015615
The transmitter has been examined and tested to determine that the design meets basic electrical, mechanical, and fire protection requirements by FM, a nationally recognized testing laboratory (NRTL) as accredited by the Federal Occupational Safety and Health Administration (OSHA).

Hazardous locations certification (Mobrey MSP900GH only)

European certification

ATEX intrinsically safe approval

Certificate number: SIRA 02ATEX2405X
ATEX intrinsic safety (Mobrey MSP900GH only)
II 1 G
Ex ia IIC T6 Ga (T_a –40 to 55 °C)
Ex ia IIC T4 Ga (T_a –40 to 60 °C)
Ui = 30 V, Ii = 120 mA, Pi = 0.82 W, Li = 108 µH, Ci = 0 µF

Special conditions for safe use

1. All transmitter models have external plastic parts, which could present a risk of ignition due to electrostatic charge build-up. They shall not be directly installed in any process where its enclosure might be charged by the rapid flow of non-conductive media.
2. All transmitter models shall only be cleaned with a damp cloth.
3. When the transmitter housing uses aluminum alloy in its construction, this presents a risk of ignition due to impact and shall be taken into consideration on installation and use.

Dimensional Drawings

Threaded mounting (MSP422)

Note: Dimensions are in inches (mm).

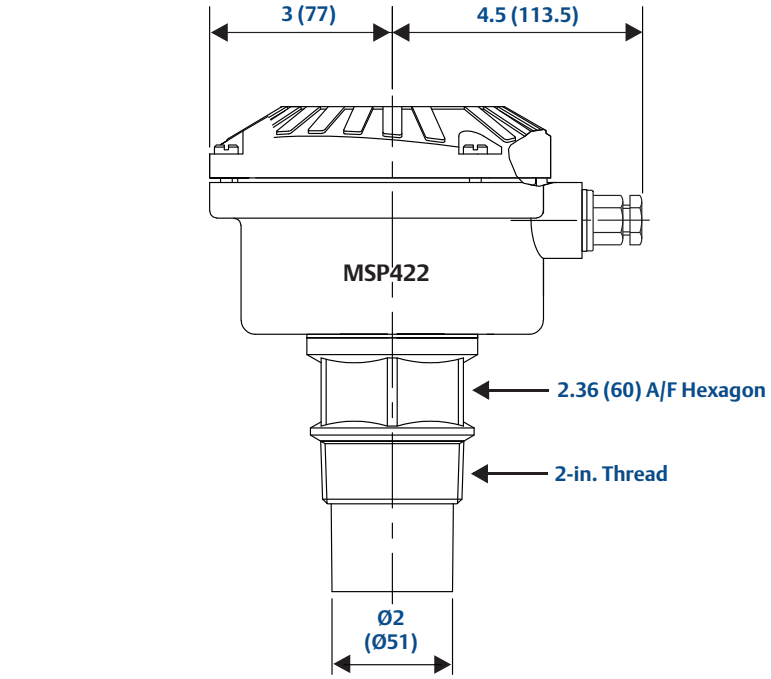

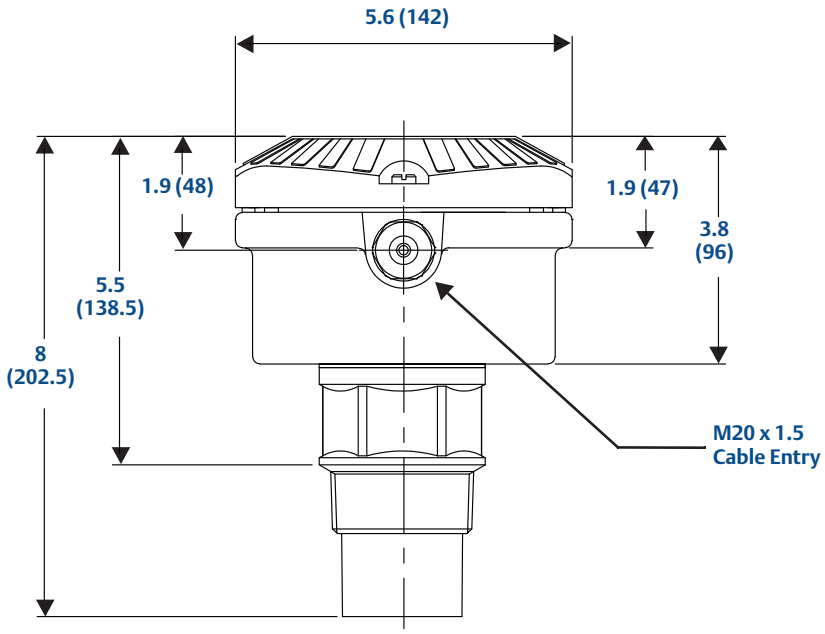

Threaded mounting (MSP400RH/MSP900GH)

Note: Dimensions are in inches (mm).

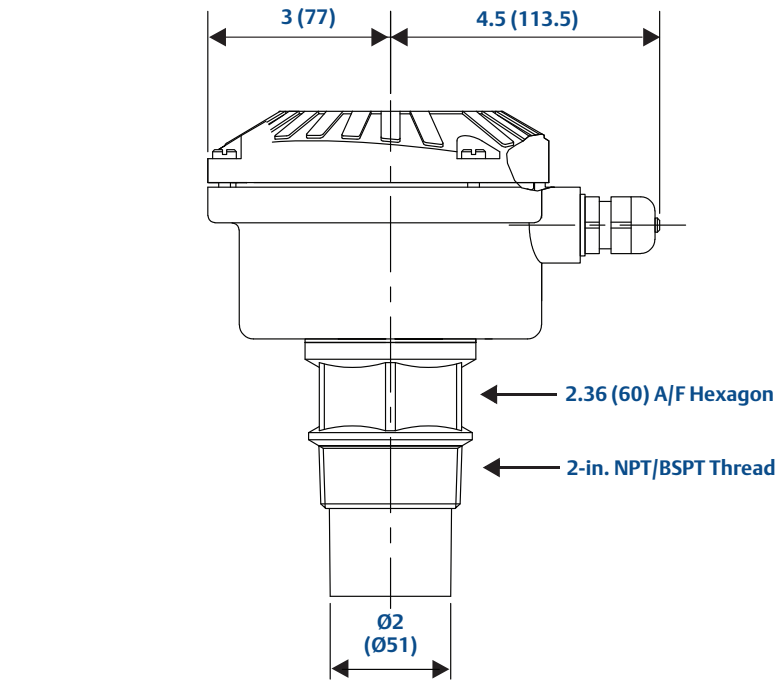

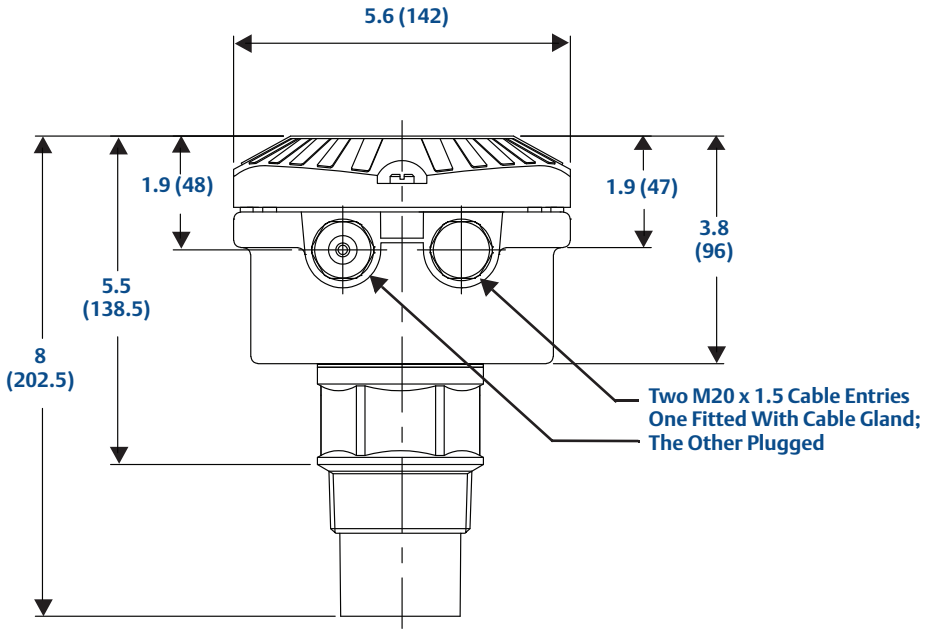

Product Selection
Contents

2-in. NPT/BSPT bracket kits

Note: Dimensions are in inches (mm).

Note: The combined weight of bracket and disc is 16 oz. (0,5 kg).

SIDE VIEW

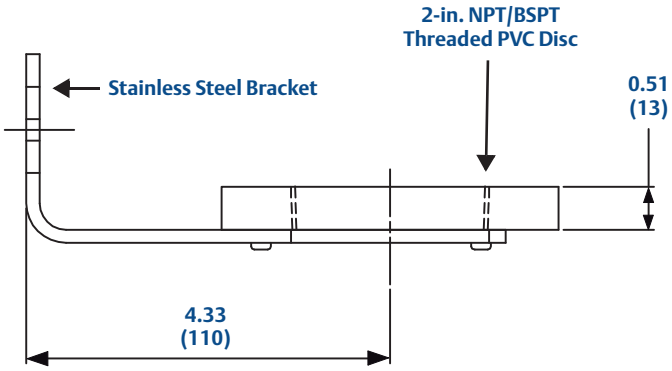

END VIEW

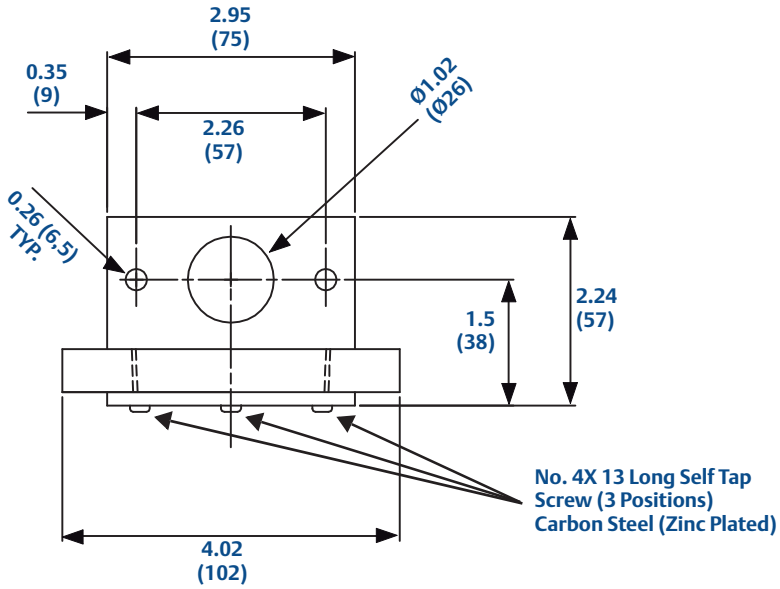

ACTUAL VIEW WITH TRANSMITTER MOUNTED

Emerson Process Management
Rosemount Measurement Ltd.
158 Edinburgh Avenue
Slough, Berks, SL1 4UE, UK
Tel: +44 (0)1753 756600
Fax: +44 (0)1753 823589
www.emersonprocess.com

Emerson Process Management
Rosemount Inc.
8200 Market Boulevard
Chanhassen, MN 55317, USA
T (USA) 1 800 999 9307
T (International) +1 952 906 8888
F +1 952 906 8889

Standard Terms and Conditions of Sale can be found at www.rosemount.com\terms_of_sale
The Emerson logo is a trade mark and service mark of Emerson Electric Co.
Rosemount and the Rosemount logotype are registered trademarks of Rosemount Inc.
All other marks are the property of their respective owners.
© 2015 Rosemount Measurement Ltd. All rights reserved.

Product Selection

Contents

mobrey

EMERSON™
Process Management

Product Data Sheet
February 2015
IP2032

Mobrey Ultrasonic

MSP900SH Level and MSP900FH Flow Transmitters

- Non-contacting measurement with no moving parts
- Fast and simple to install and configure
- Continuous measurement of level, contents (volume), or open channel flow
- MCERTS certified version for use with Mobrey MCU900 Series Control Unit
- Loop-powered 4-20 mA with HART® output
- Factory sealed (IP68) for use in wet-wells and sumps up to 39 ft. (12 m) deep
- Rugged all UPVC construction ideal for application on exposed sites such as reservoirs, rivers, remote works, and effluent treatment plants

mobrey

EMERSON™
Process Management

Overview of the Mobrey MSP900SH and MSP900FH

Mobrey MSP900SH
Level Transmitter

Mobrey MSP900FH
Flow Transmitter

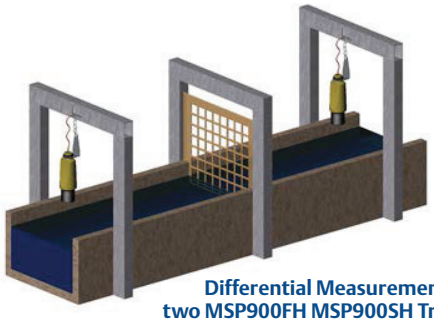

Differential Measurement with
two MSP900FH MSP900SH Transmitters

Open Channel Flow Measurement with a Mobrey MSP900SH
Transmitter and Mobrey MCU900 Series Controller Unit

Measurement principle

The MSP900SH and the MSP900FH are based on ultrasonic technology. Ultrasonic pulse signals are transmitted and reflected from the liquid surface. The transmitter 'listens' for reflected signals (echoes) and measures the time-delay between transmitting and receiving.

The distance to the liquid surface is automatically calculated using the computed time-delay.

The MSP900SH has an integrated sensor for automatically compensating the Distance for temperature effects.

The MSP900FH has a factory fitted remote temperature sensor to continuously measure the air temperature around the transmitter. It then computes the speed of sound in air, automatically compensating Distance for temperature effects.

The level measurement (Bottom Reference minus Distance) is sent through the 4–20 mA and HART output.

Features and benefits

- Eliminates problems experienced with contacting instrumentation
- Simple set-up and operation
- Minimal maintenance after installed
- Low cost of installation and commissioning
- Process downtime minimized
- Non-contacting measurement with no moving parts
- Sealed rugged UPVC housing
- Corrosion resistant UPVC wetted material
- Factory fitted with up to 164 ft. (50 m) of two-core cable
- 4–20 mA loop-powered
- Operating range to 39 ft. (12 m)
- Measures liquid height, distance to liquid, volume, or flow in open channels
- Certified Intrinsically Safe and used for level (or distance) measurements in hazardous areas
- Automatic temperature compensation

Contents

Measurement principle ..... page 146
Mobrey MSP900SH Level Transmitter Ordering ..... page 148
Mobrey MSP900FH Flow Transmitter Ordering ..... page 148
MSP Accessories ..... page 148
Specifications ..... page 149
Product Certifications ..... page 152
Dimensional Drawings ..... page 153

Special features

Advanced software features

- Learn routine (false echo registration)

  The transmitter can learn to ignore up to four false echoes caused by the pulse signal reflecting off obstructions, until the actual level is seen.

- Empty tank mapping

  When a tank is empty, the transmitter can learn to ignore up to four false echoes, without the need for user interaction.

- Present depth

  The bottom reference can be automatically set using a known user-entered depth.

- Set as empty

  When the tank is empty, the bottom reference can be automatically reset to the measured distance.

- Distance offset

  The distance to the surface can be adjusted by a user-entered positive or negative offset value.

- Level offset

  The level can be adjusted by a user-entered positive or negative offset value

- Bottom blanking

  The transmitter can be set to ignore an area of the tank bottom to avoid false echoes from obstructions.

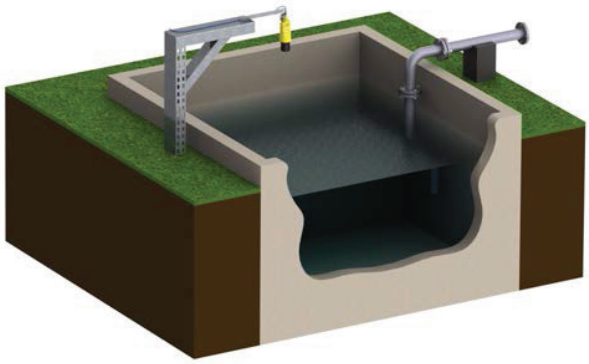

Reservoir Level Measurement with a Mobrey MSP900SH Transmitter

Mobrey MSP900FH Flow Transmitter with the Head Verification Device (HVD) accessory in the calibration position

Applications

- Storage tank levels, open channel flow, effluent pits, reservoir level, buffer tanks, and more

Choosing the right model

- Each MSP Series transmitter has been designed for a specific purpose, as shown in the table here:

Transmitter Purpose	Model	Range
Simple level measurement within a tank, sump, or reservoir	MSP900SH	39-ft. (12 m)
Differential level measurement (2 x Transmitters and 1 x MCU900)	MSP900SH or MSP900FH	39-ft. (12 m) 11-ft. (3,3 m)
Open channel flow or volume measurement	MSP900FH	11-ft. (3,3 m)

Mobrey MSP900SH Level Transmitter Ordering

Table 1. MSP900SH Ordering Information

Model	Product Description
MSP900S	Ultrasonic level sump transmitter, 39 ft. (12 m) range
Signal Output	
H-	4–20 mA with HART communication
Product Certificates	
A(1)	ATEX and CSA Intrinsically Safe
U(2)	FM and CSA Intrinsically Safe
Cable Lengths	
/3	10 ft. (3 m) of PVC sheathed twisted-pair
/20	65 ft. (20 m) of PVC sheathed twisted-pair
/50	164 ft. (50 m) of PVC sheathed twisted-pair
Typical Model Number: MSP900SH-A/3	

(1) Product Certificates code 'A' also selects the 1-in BSPP mounting thread version of the transmitter.

(2) Product Certificates code 'U' also selects the 1-in NPT mounting thread version of the transmitter.

Mobrey MSP900FH Flow Transmitter Ordering

Table 2. MSP900FH Ordering Information

Model	Product Description
MSP900F	Ultrasonic Open Channel Flow Transmitter, 11 ft. (3,3 m) level range, fitted with remote temperature sensor
Signal Output	
H-	4–20 mA with HART communication
Product Certificates	
Standard	
A(1)	ATEX and CSA Intrinsically Safe
U(2)	FM and CSA Intrinsically Safe
Cable Lengths	
/20	65 ft. (20 m) of PVC sheathed twisted-pair
Typical Model Number: MSP900FH-A/20	

(1) Product Certificates code 'A' also selects the 1-in BSPP mounting thread version of the transmitter.

(2) Product Certificates code 'U' also selects the 1-in NPT mounting thread version of the transmitter.

MSP Accessories

Accessories	
MSP-FLG4(1)	Flange Mounting, 1-in. to 2-in. ASME B16.5 Class 150 / EN1092-1 PN10/16 (DN50), PVC
MSP-SUB2	Submersion shield
MSP-BRK4	316 SST Steel Suspension Bracket and 1-in. locknut (*same bracket as supplied with all transmitter versions*)
03100-1005-0001	Conduit adaptor boss, 1-in. NPT female to $^{3}/_{4}$-in. NPT female (*as supplied with the MSP900FH-U*)
03100-1005-0002	Conduit adaptor boss, 1-in. BSPP female to M20 x 1.5 female (*as supplied with the MSP900FH-A*)
MSP-HVD(2)	Head Verification Device (HVD), 304 SST

(1) Supplied with EPDM gasket, suitable for low pressure plastic flanges only.

(2) The Mobrey Head Verification Device (HVD) is recommended for open channel flow applications to allow checking and certification of the transmitter. It features a target plate at a fixed distance from the transmitter face. The target plate is moved under the transmitter to verify the transmitter accuracy.

Specifications

General

Product

- Mobrey MSP900SH and MSP900FH Ultrasonic Transmitters: Level, Content (Volume), and Open channel flow measurement

Measurement principle

- Ultrasonic, time-of-flight

Measuring performance

Measurement range

- MSP900SH: 1 to 39 ft (0,3 to 12 m)
- MSP900FH: 1 to 11 ft (0,3 to 3,3 m)

Blanking distance (dead zone)

- 12 in. (0,3 m)

Level resolution

- Better than 0.06 in. (1 mm)

Level accuracy under reference conditions(1)

- ± 0.1 in. (2,5 mm) for measured distance < 3.3 ft. (1 m)
- ± 0.25% of distance for measured distance > 3.3 ft. (1 m)

Ultrasonic pulse rate

- 1 per second (user configurable 0.5 to 2.0 seconds)

Configuration

Output Process Variable (PV)

- Level (Linear or Scaled), Content (Volume), or Open Channel Flow

Configuration tools

- Field Communicator or Mobrey MCU900 Series Universal Control Unit

Electrical

Cable

- Factory fitted 2-core shielded cable for external power supply and communication

Cable sheath

- PVC

Cable length

- 10, 65, or 164 ft. (3, 20, or 50 m). All cables may be shortened or extended on site

External power supply

- 12 to 40 Vdc (non-hazardous area)
- 12 to 30 Vdc (hazardous area)

Earthing

- Connect the cable screen to earth

Communication (signal output)

- Analog 4–20 mA, HART

Signal on alarm

- Low = 3.6 mA. High = 22.5 mA

Saturation levels

- Low = 3.8 mA. High = 20.5 mA

Electrical parameters

- Ui = 30 V, Ii = 120 mA, Pi = 0,82 W, Ci = 5 nF, Li = 27 mH

Physical specifications

Materials selection

- Emerson provides a variety of product with various product options and configurations including materials of construction that can be expected to perform well in a wide range of applications. The product information presented is intended as a guide for the purchaser to make an appropriate selection for the application. It is the purchaser's sole responsibility to make a careful analysis of all process parameters (such as all chemical components, temperature, pressure, flow rate, abrasives, contaminants, etc.), when specifying product, materials, options and components for the particular application. Emerson Process Management is not in a position to evaluate or guarantee the compatibility of the process fluid or other process parameters with the product, options, configuration or materials of construction selected.

Materials used in construction of Mobrey MSP900SH and MSP900FH

Body and wet-side material

- UPVC (stabilized)

Lock nut

- Glass filled nylon

(1) Temperature: 68 °F (20 °C), Pressure: 1013 mbar (atmospheric pressure), Relative Humidity: 50%, calm and stable water surface.

Mechanical

Mounting thread size

- 1-in. NPT or 1-in. BSPP
- See "MSP Accessories" on page 148 for optional mounting accessories

Weight of transmitter

- 3.1 lb with 10 ft. cable, 4.1 lb with 65 ft. cable, and 5.8 lb with 164 ft. cable

  (1,4 kg with 3 m cable, 1,9 kg with 20 m cable, and 2,6 kg with 50 m cable)

Measuring

Temperature compensation

- MSP900SH: Automatic with integral temperature compensation
- MSP900FH: Automatic with factory fitted remote temperature sensor for dynamic temperature compensation

Environment

Ambient temperature

- –40 to 140 °F (–40 to 60 °C)

Process temperature

- –40 to 140 °F (–40 to 60 °C)

Process pressure

- –4 to 44 psi (–0,25 to 3,0 bar)

Ingress protection

- IP68 to 33 ft. (10 m)

Electromagnetic compatibility

- EN 61326-1:2006

Certifications

- CE-mark, FM, CSA, or ATEX dependent on order code
- The Mobrey MSP900FH is MCERTS(1) certified

(1) The Mobrey MSP900FH forms part of an MCERTS certified system when used with a Mobrey MCU900 Series Control Unit.

Temperature and pressure ratings

The process temperature and pressure rating depends on the design of the transmitter in combination with the flange materials.

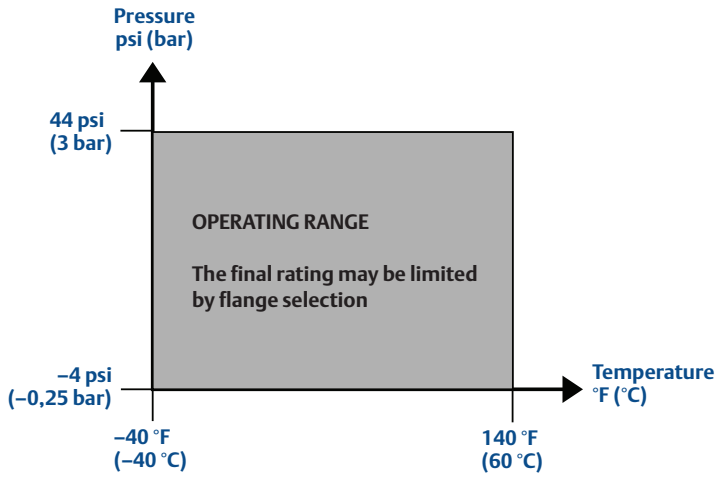

Process temperature and pressure diagram for Mobrey MSP900SH and MSP900FH

Load limitations

A Field Communicator requires a minimum load resistance of 250 Ohm within the loop in order to function properly. Communication with a Mobrey MCU900 Universal Controller does not require additional resistance.

The maximum load resistance can be determined from these diagrams:

Non-intrinsically safe installation

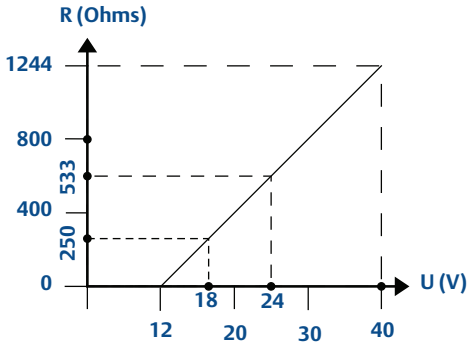

Intrinsically safe installations

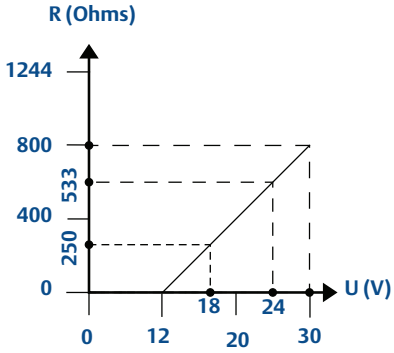

Mobrey MSP900SH and Mobrey MSP900FH

Note
R = Maximum Load Resistance
U = External Power Supply Voltage

Product Certifications

Approved manufacturing locations

- Rosemount Measurement Limited
  – Slough, United Kingdom

European directive information

The EC declaration of conformity for all applicable European directives for this product can be found in the MSP900SH/FH safety instructions booklet IP2040/SI, available to download from the Mobrey brand pages at www.emersonprocess.com. A hard copy may be obtained by contacting your local sales office.

ATEX directive (94/9/EC)

- Emerson Process Management complies with the ATEX Directive

Pressure equipment directive (PED) (97/23/EC)

- The MSP900SH and MSP900FH are outside the scope of PED Directive

Electro magnetic compatibility (EMC) (2004/108/EC)

- EN 61326-1:2006

MCERTS certification (MSP900FH only)

- Sira certificate number: MC080131

Hazardous locations certifications

American and Canadian approvals

Factory Mutual (FM) intrinsically safe approval

Certificate number: 3021193
Intrinsically safe for Class 1, Division 1, Groups A, B, C, and D
Zone marking: Class I, Zone 0, AEx ia IIC
Temperature code T6 (T_a = 55 °C)
Temperature code T4 (T_a = 60 °C)
Intrinsically safe when installed in accordance with Mobrey drawing 71097/1131
IP66, IP68

Canadian Standards Association (CSA) intrinsically safe approval

Certificate number: 1352094
Ex ia IIC
Intrinsically safe when installed with certified barriers meeting transmitter entity parameters:
Ui = 30 V, Ii = 120 mA, Pi = 0,82 W, Ci = 5 nF, Li = 27 µH
Temperature code:
T4 at Ta = –40 to 60 °C or T6 at Ta = –40 to 55 °C

European certifications

ATEX intrinsically safe approval

Certificate number: Sira 09ATEX2102X
Intrinsically safe for II 1 G, Ex ia IIC Ga
T6 (T_a = –40 to 55 °C), T4 (T_a = –40 to 60 °C)
Ui = 30 V, Ii = 120 mA, Pi = 0,82 W, Ci = 5 nF, Li = 27 µH
IP66, IP68

Dimensional Drawings

MSP900SH threaded mounting

Note: Dimensions are in inches (mm).

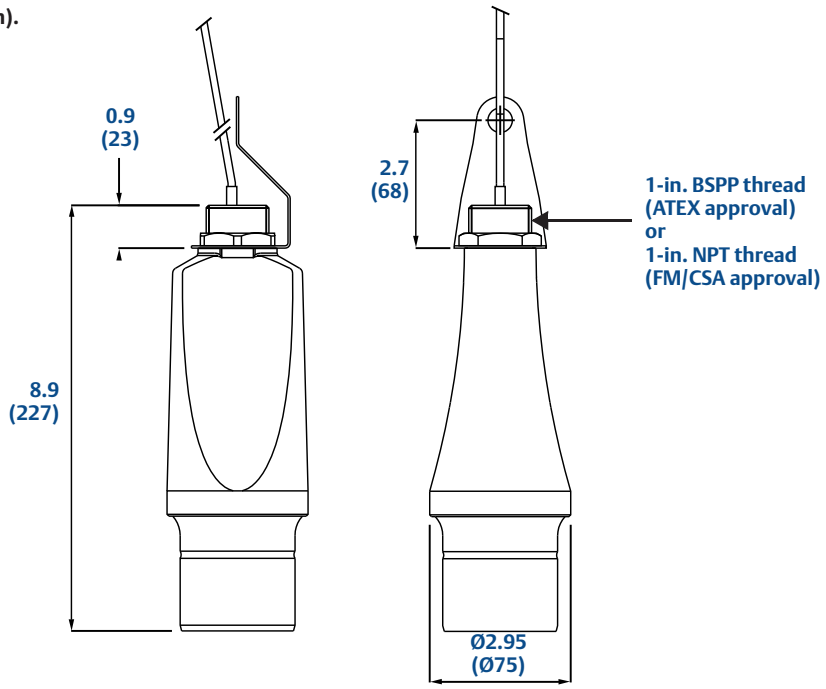

MSP900FH Threaded Mounting

Note: Dimensions are in inches (mm).

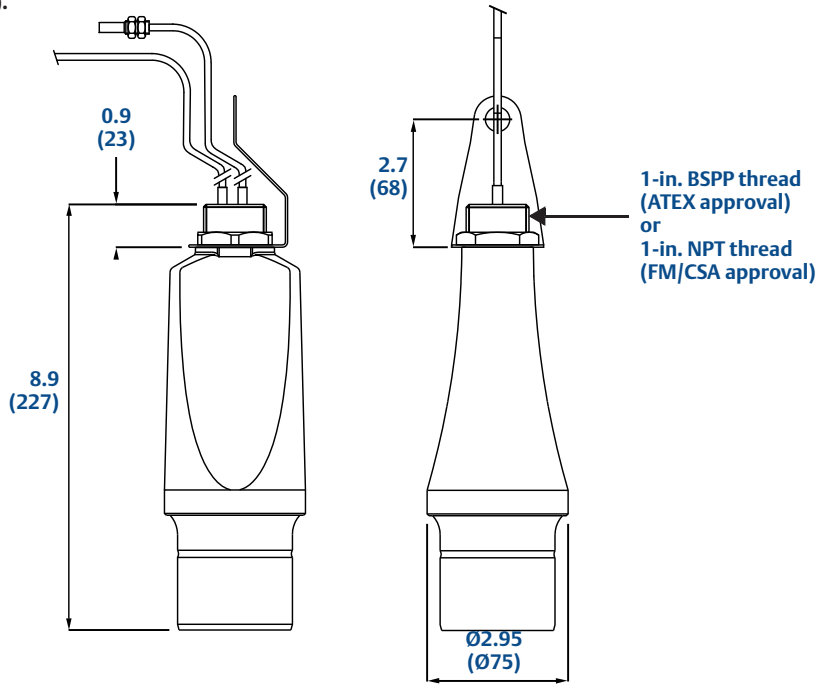

1-inch NPT/BSPP Bracket Kits

Note: Dimensions are in inches (mm)

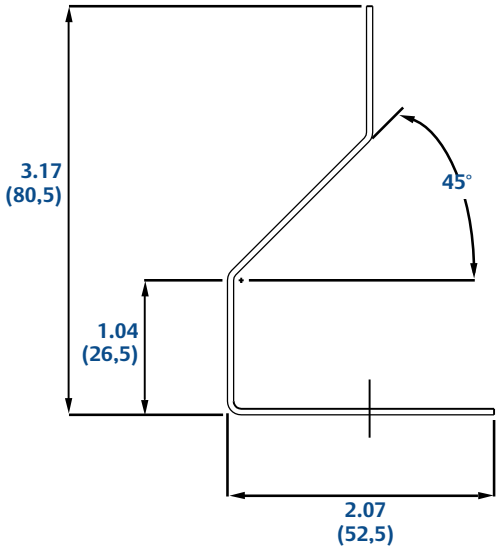

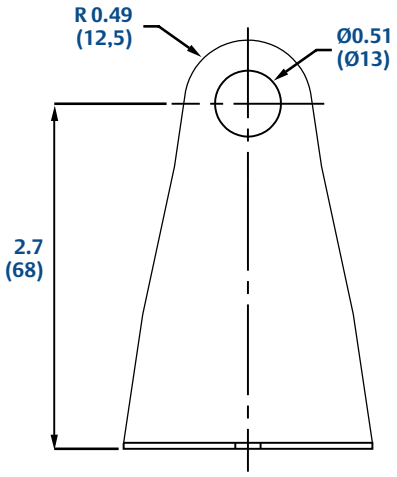

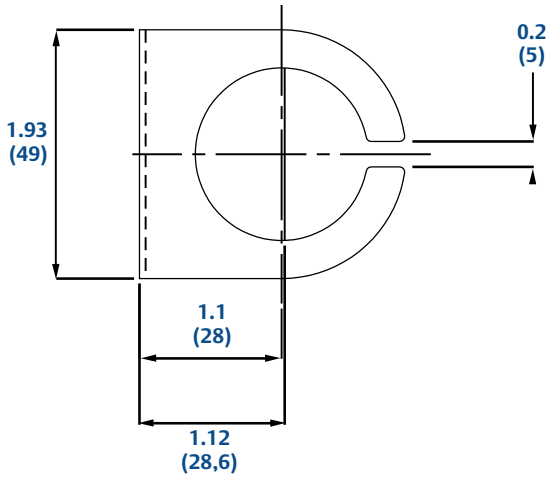

Emerson Process Management
Rosemount Measurement Ltd.
158 Edinburgh Avenue
Slough, Berks, SL1 4UE, UK
Tel: +44 (0)1753 756600
Fax: +44 (0)1753 823589
www.emersonprocess.com

Emerson Process Management
Rosemount Inc.
8200 Market Boulevard
Chanhassen, MN 55317, USA
T (USA) 1 800 999 9307
T (International) +1 952 906 8888
F +1 952 906 8889

Standard Terms and Conditions of Sale can be found at www.rosemount.com\terms_of_sale
The Emerson logo is a trade mark and service mark of Emerson Electric Co.
Rosemount and the Rosemount logotype are registered trademarks of Rosemount Inc.
All other marks are the property of their respective owners.
© 2015 Rosemount Measurement Ltd. All rights reserved.

mobrey

EMERSON™
Process Management

Product Data Sheet
February 2015
IP2031

Mobrey MCU900 Series

4–20 mA + HART Compatible Controller

HART COMMUNICATION PROTOCOL

CE

- Intrinsically Safe power supply to transmitter
- 4–20mA HART input
- Isolated 4–20mA output
- Five control relays
- Multi-function back lit display
- Wall or panel mount
- Pre-programmed linearization: volume and open channel flow
- Configurable by using the integral keypad

mobrey

EMERSON™
Process Management

Overview of the Mobrey MCU900 Series

Wall Mount, IP65 Model Of The Mobrey MCU900 Series Controller Unit

Panel Mount Model Of The Mobrey MCU900 Series Controller Unit

The MCU900 Series of wall and panel mounting control units provide comprehensive control functionality for any 4–20 mA or HART compatible transmitter. A back-lit display gives clear visual indication of the measured value and status of all inputs and outputs.

Features and benefits

- Tough weatherproof wall mount enclosure for internal and external mounting
- Accepts any 4–20 mA or HART compatible input. (HART revisions 5, 6, and 7 are supported)
- Five voltage-free SPDT relays for alarm and control duties
- Supports two voltage-free contact closure inputs
- 4–20 mA 12-bit isolated current output proportional to calculated value
- Bright local display of measured value and input/output status
- Pre-programmed tank shapes, flow algorithms, and control control routines simplify configuration. A 20-point strapping table facility is provided for non-standard applications
- Real-time clock allows energy saving routines and pump efficiency calculations

Intrinsically safe power supply to transmitter

The MCU900 Series is mounted in a non-hazardous area, and provides a protected (intrinsically safe) 24 volts direct current supply to a transmitter in a hazardous area.

Ideal for programming and control of HART transmitters

It is ideal for programming and control of Mobrey MSP Series level and flow transmitters.

Other HART transmitters can be connected. The MCU900 Series recognizes the transmitters as an “unknown instruments” but allows access to programming of Universal and Common Practice HART commands. HART revisions 5, 6, and 7 are supported.

Contents

Overview of the Mobrey MCU900 Series . . . . . page 158
Mobrey MCU901/MCU902 Ordering . . . . . page 160
Mobrey MCU90F/MCULOG Ordering . . . . . page 160
Specification . . . . . page 161
Product Certifications . . . . . page 162
Dimensional Drawings . . . . . page 163

Special features

- Configured and interrogated using an integral six-button keypad
- Easy to navigate menu structure
- Wizard assisted programming, with password protection to prevent unauthorized access

  Many popular configurations are “Wizard assisted”, enabling fast and accurate programming. Typical applications include level, volume, distance measurement, and open channel flow measurement
- The HART digital or 4–20 mA analog signal from the transmitter may be offset, dampened, scaled, and linearized. A range of pre-programmed linearization algorithms are user-selectable
- The 4–20 mA output signal may be scaled to re-transmit all or just part of the transmitter’s input signal or calculated value
- Five relays are fully field programmable to perform a variety of control, fault indication, and alarm duties
- Two digital inputs can be individually set-up to perform various control actions (e.g. raise an alarm) whenever activated

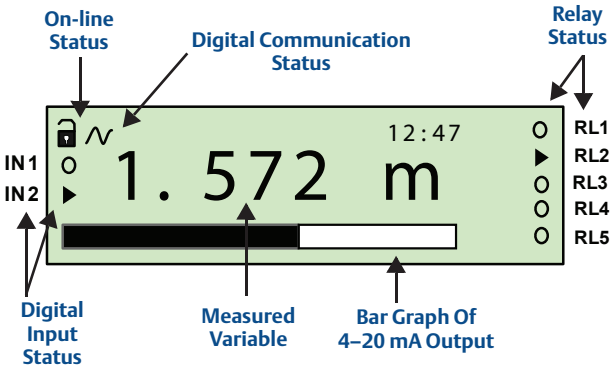

Typical MCU901 Display

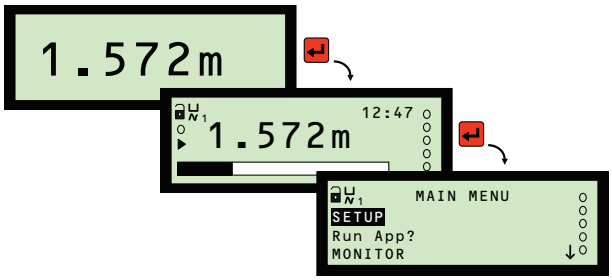

Easy To Navigate Menu Structure

Choosing the right control unit

Each model of the MCU900 Series has been designed for a specific purpose, as shown below:

Table 1. Choosing The Right Control Unit

Controller Unit Purpose	Model	Ordering Information
Pump Control, Contents, or Flow	MCU901	Page 160
Differential Level or Summated Flow	MCU902	Page 160
Process Value (PV) Data Logging	MCULOG	Page 160
Open Channel Flow Data Logging	MCU90F	Page 160

- The standard MCU901, MCU90F, and MCULOG Control Units accept input from one transmitter
- The Mobrey MCU901 Differential Measurement Control Unit accepts input from two transmitters and performs sum or differential calculations, providing a single current output proportional to the answer
- The Data Logging Control Units provides on-board logging of the process/primary value (PV) and totalized open channel flow

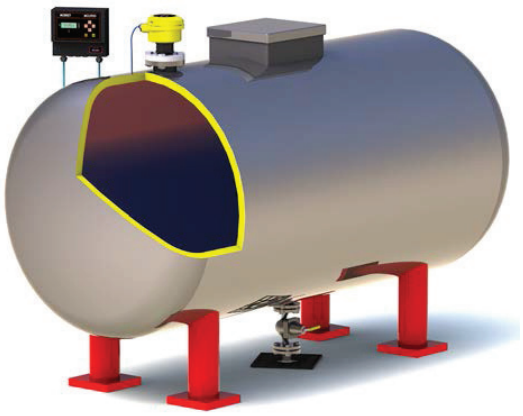

Level Measurement with a Mobrey MSP400RH Transmitter and a Mobrey MCU900 Series Control Unit

Mobrey MCU901/MCU902 Ordering

Table 2. MCU901 and MCU902 ordering information

Model	Product Description
MCU901	Standard Control Unit, 110 to 230 Vac (50/60 Hz)
MCU902	Differential Control Unit
Enclosure / Mounting	
Standard	
WX-	Wall mounting, IP65
PX-	Panel mounting, IP20
Product Certificates	
A	ATEX Intrinsically Safe
OPTIONS	
Power Supply	
24	24 Vdc
Typical Model Numbers: MCU901WX-A and MCU902WX-A	

Mobrey MCU90F/MCULOG Ordering

Table 3. MCU90F and MCULOG ordering information

Model	Product Description
MCU90F	Open Channel Flow Logging Control Unit
MCULOG	Logging Control Unit
Enclosure / Mounting	
Standard	
WX-	Wall mounting, IP65
PX-	Panel mounting, IP20
Product Certificates	
A	ATEX Intrinsically Safe
OPTIONS	
Power Supply	
24	24 Vdc
Typical Model Numbers: MCU90FWX-A and MCU90FWX-A	

Specification

General

Product

- Mobrey MCU900 Series Universal Control Unit:
  MCU901 Standard Control Unit
  MCU902 Differential Control Unit
  MCU90F Flow Logging Control Unit
  MCULOG Logging Control Unit

Mounting styles

- Wall mount or panel mount

Display

Type

- Dot matrix LCD, 32 x 122 pixels, back lit

Location

- Integrated into enclosure

Indicators

- Red LED for health status

Electrical

Power options

- AC mains powered control units
- DC powered control units

AC mains power supply input

- 115 or 230 Vac ±10% (switch selectable)
- Power consumption: 10 VA nominal, 18 VA maximum
- Fuse: 200 mA(T), 5 x 20 mm, 250 V

DC power supply input

- 15 to 30 Vdc, 30 Vdc maximum
- Power consumption: 9 W maximum

Current input

- 4–20mA (Earth referenced in control unit) or HART digital communications (revisions 5, 6, and 7)
- Supplies 23 volts from 400 Ohm source resistance

Trigger inputs

- 2 voltage-free contact closures

Relays

- 5 x SPDT, 5 A at 240 Vac

Current output

- Signal range (nominal): 4–20 mA
- Output range (linear): 3.8 to 20.5 mA
  (Alarm current of 3.6 mA, 21 mA, or 22.5 mA user-selectable)
- Load: Rmax is 1 K Ohm
- Resolution: 12-bit
- Regulation: < 0.1% over load change from 0 to 600 Ohms
- Isolation: Isolated from other terminals to 500 Vdc
- Update rate (software): 5 times per second

Cable entry

- IP-rated wall mount enclosure:
  5 positions pre-drilled, 2 glands and 3 blanking plugs supplied
- Panel enclosure:
  Direct wiring to terminal blocks at rear

Cable connection

- Wall mount enclosure:
  Cage clamp terminal blocks in separate terminal compartment
- Panel mount enclosure:
  2-part cage clamp terminal blocks at rear

Mechanical

Materials of construction (wall mount)

- Polycarbonate enclosure and cover
- IP-rated wall mount: 304SST cover fixing screws
- Wall mount: Polyester and Alloy 400 fastening
- UV resistant Polycarbonate membrane keypad
- Nylon cable glands and blanking plugs
  (IP-rated wall mount version only)

Materials of construction (panel mount)

- Noryl PPO enclosure and cover
- Carbon Steel / Zinc plated fascia fixing screws
- UV resistant Noryl PPO membrane keypad
- Nylon + PBT terminal blocks with plated fittings

Dimensions

- See Dimensional Drawings on pages 163 to 164

Weight

- IP-rated wall mount:
  1.4 kg (mains unit) or 1.0 kg (DC unit)
- Panel mount:
  1.2 kg (mains unit) or 0.8 kg (DC unit)

Environment

Ambient temperature

- –40 to 55 °C (–40 to 131 °F)
- See Product Certifications for approval temperatures ranges

Relative humidity

- Wall mount: 100%
- Panel mount: 90% non-condensing

Electrical safety

- EN61010-1

Ingress Protection (IP) rating

- IP-rated wall mount: IP65 indoor/outdoor
- Panel mount:
  IP40 indoor mount (or IP65 if with optional hood)

Vibration

- Control Room: 0.1 to 9 Hz 1.5 mm displacement peak amplitude / 9 to 200 Hz 0.5 g

Installation category

- III : Supply voltage < 127Vac (IEC60664)
- II : Supply voltage < 254Vac (IEC60664)

Pollution degree

- 2 (IEC60664)

Maximum altitude

- 2000 m

Electromagnetic Compatibility

- Emissions and Immunity
  (for IP-rated wall mount and panel mount):
  EN61326-1:2006

Certifications

- CE-mark and ATEX

Product Certifications

Note
The MCU900 Series is mounted in a non-hazardous area, and provides a protected (intrinsically safe) 24 volts direct current supply to a transmitter in a hazardous area.

European directive information

- The EC declaration of conformity for all applicable European directives for this product may be obtained by contacting your local sales office.

ATEX Directive (94/9/EC)

- Complies with the ATEX Directive

Low Voltage Directive (2006/95/EC)

- EN61010 Part 1: 2001

Pressure equipment directive (PED) (97/23/EC)

- The MCU900 Series is outside the scope of the PED directive

Electro magnetic compatibility (EMC) directive

- EN61326-1: 2006

CE-mark

- The Mobrey MCU900 Series complies with EMC, ATEX, and LVD directives

Restriction of Hazardous Substances (ROHS)

- The Mobrey MCU900 Series is exempt

Hazardous locations certifications

ATEX intrinsically safe approval

Certificate numbers:
BAS00ATEX7064 (Wall Mount),
BAS01ATEX7225X (Panel Mount)
Intrinsically safe for II(1) G D,
[Ex ia Ga] IIC, [Ex ia Da] IIIC
Ambient temperature: –40 °C to +55 °C
Uo = 27,3 V, Io = 96,9 mA, Po = 0,66 W, Li = 0,22 mH, Ci = 0,6 nF

Special conditions for safe use (Certificate BAS01ATEX7225X):

1. Terminal 30 must be earthed in the safe area to a high integrity earth.

Dimensional Drawings

Dimensions for the wall-mounted unit

Note: Dimensions are in inches (mm).

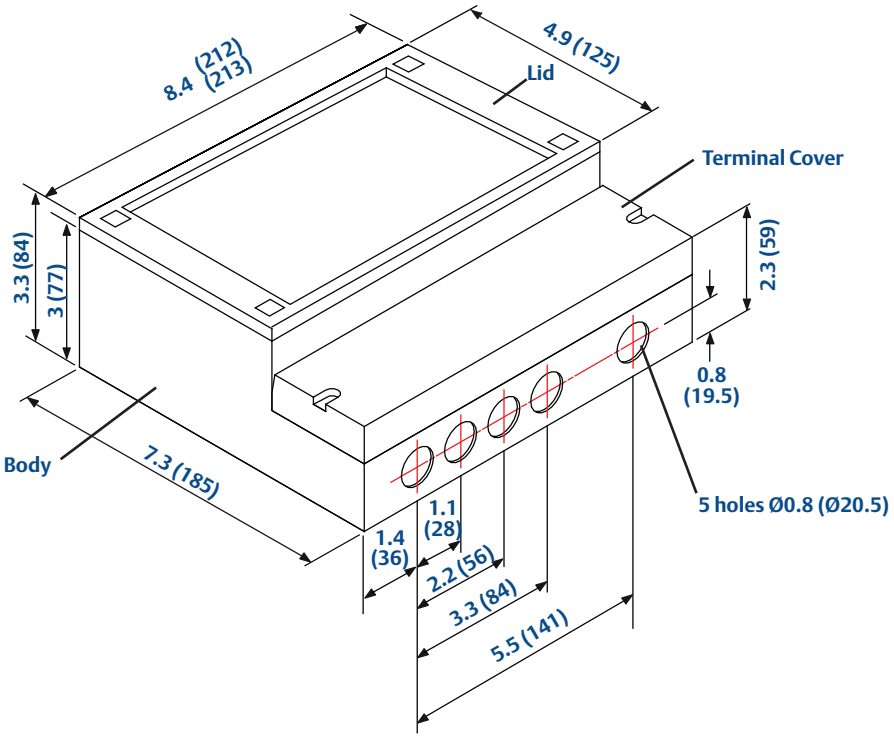

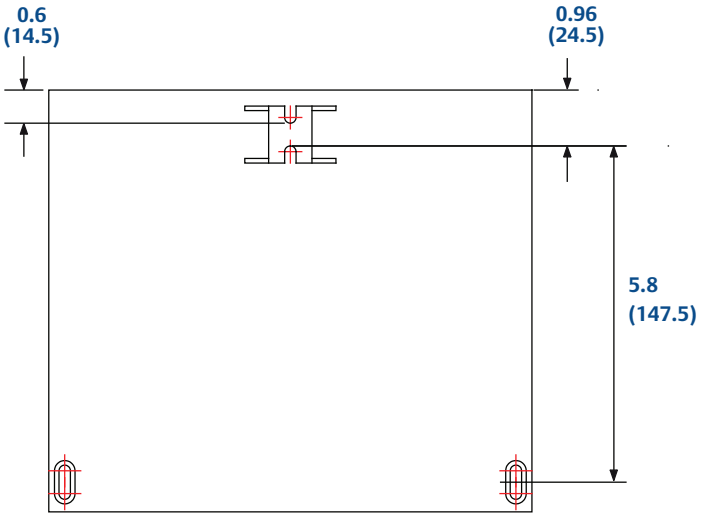

Dimensions for Panel Mount

Note: Dimensions are in inches (mm).

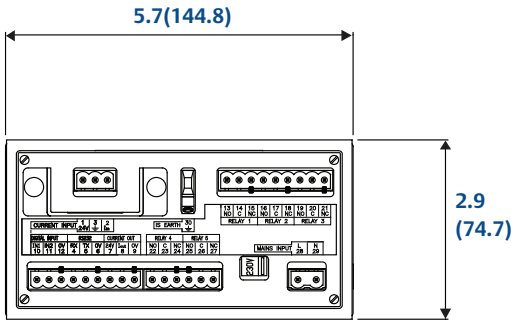

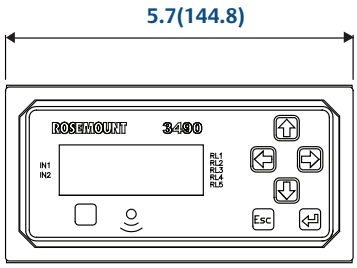

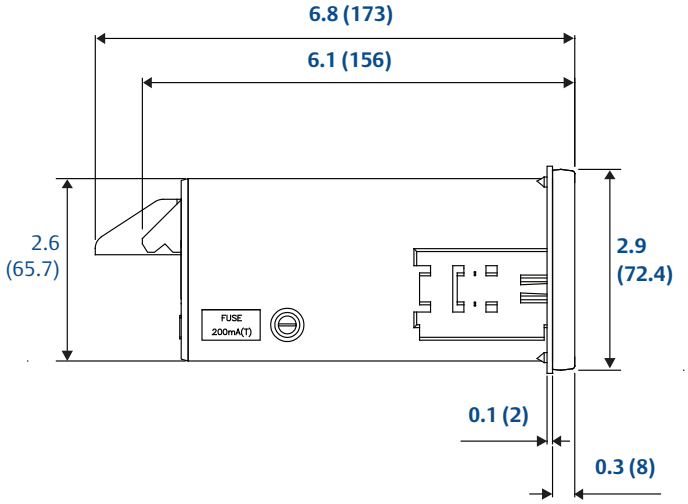

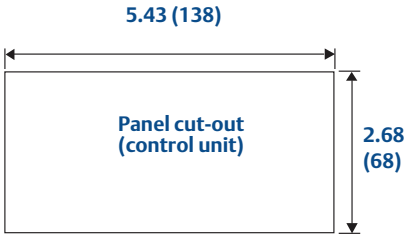

For safety, the panel should be strong enough to support the 1.2 kg (mains power) or 0.8 kg (DC power) mass of the unit.

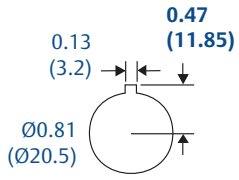

Panel cut-out (RS232 data download socket on MCU90F only)

The Emerson logo is a trademark and service mark of Emerson Electric Co.
Rosemount is a registered trademark of Rosemount Inc.
Mobrey is a registered trademark of Rosemount Measurement Ltd.
All other marks are the property of their respective owners.
Standard Terms and Conditions of Sale can be found at www.rosemount.com\terms_of_sale

© 2015 Rosemount Measurement Limited. All rights reserved.

Emerson Process Management
Rosemount Measurement Ltd.
158 Edinbugh Avenue,
Slough, Berks., SL1 4UE, UK
Tel +44 (0)1753 756600
Fax +44 (0)1753 823589
www.emersonprocess.com

Emerson Process Management
Rosemount Inc.
8200 Market Boulevard
Chanhassen, MN 55317, USA
Tel (USA) 1 800 999 9307
Tel (International) +1 952 906 8888
Fax +1 952 906 8889

mobrey

EMERSON™
Process Management

Product Data Sheet
September 2014
IP257

Mobrey MSM400

Ultrasonic Suspended Solids Monitoring and Control System

- Continuous sludge discharge monitor for up to 50% suspended solids
- Rugged 316 stainless steel sensors for in-tank mounting
- Choice of flanged pipeline sensors for in-line density measurement
- Blanket level detection for primary and secondary sludge and industrial slurries

Product Selection
Contents

mobrey

EMERSON™
Process Management

Overview of the Mobrey MSM400

The MSM400 system contains a control unit and either a tank-mountable sensor or pipe-section with integral sensors

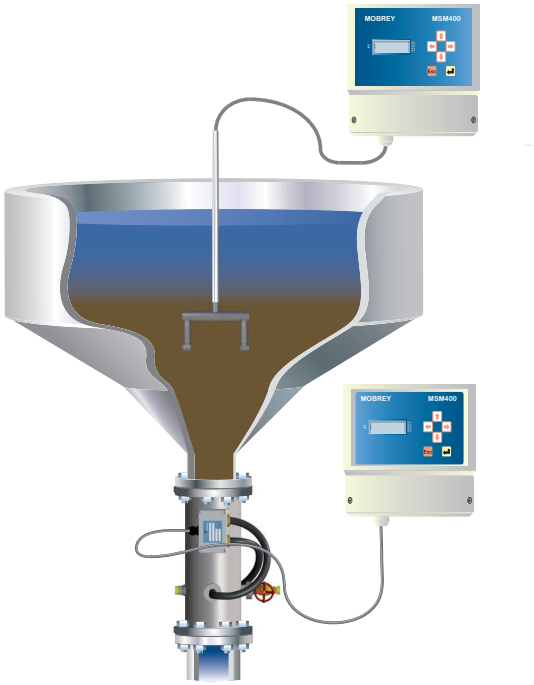

Robust stainless steel sensors may be tank mounted or housed in a pipe-section sensor on the clarifier

The Mobrey MSM400 ultrasonic suspended solids monitoring and control system can continuously monitor the suspended solids or sludge density contained in, or flowing from, a clarifier or settlement tank during de-sludging.

Measurement principle

Many years of practical experience have shown that measurement of ultrasonic attenuation in a slurry is directly proportional to the percentage of suspended solids.

The MSM400 system uses this principle to produce a digital display of the suspended solids measurement.

Features and benefits

Control unit

- Bright local display of the measured value and statuses
- 4–20 mA / HART output signal of measured value
- Two SPDT (single-pole-double-throw) relays for control and alarm indication purposes
- A digital trigger input can perform various control actions
- Comes complete with a range of user-selectable calibration settings for simple initial set-up, but can also be calibrated against samples analyzed for % solids in a laboratory
- Provides the automatic control sequence to start a pump or control a valve for sludge or settled product removal
- Local programming of the control unit is supported using the integral keypad and an easy to navigate menu structure
- Remote programming and monitoring is supported using a Field Communicator or a smart wireless THUM™ adapter
- Auto-selection of AC or DC power supply, allowing back-up if one power supply fails

Intrinsically safe sensors

- Dual-operating-frequency gap sensors, 1 MHz or 3.3 MHz

Contents

MSM400 Control Unit and Sensors Ordering . . page 169
Specifications for Control Unit . . . . . page 170
Specifications for Tank-mountable Sensors . . . . page 171
Specifications for Pipe-section with Sensors . . . page 171
Product Certifications . . . . . page 172
Dimensional Drawings . . . . . page 173

MSM400 Control Unit and Sensors Ordering

Specification and selection of product materials, options, or components must be made by the purchaser of the equipment. See Material selection below for more information.

Table 1. MSM400 control unit ordering information

Model	Product Description
MSM400(1)	Control unit, ATEX and IECEx intrinsically safe certified, IP65
Typical Model Number: MSM400	

(1) Only the gap sensor inputs on the control unit are intrinsically safe certified. The control unit itself must be sited in a non-hazardous area.

Table 2. MSM400 sensors ordering information

★The Standard offering represents the most common options. The starred options (★) should be selected for best delivery. The Expanded offering is subject to additional delivery lead time.

Model	Product Description	
MSM433	Tank-mount sensor	
MSM448	Pipe section with sensors	
Approval		
Standard		**Standard**
A	Intrinsically safe (ATEX and IECEx)	★
Size(1)		
Standard		**Standard**
100T	1 / 3.3 MHz 4 in. (100 mm) gap tank sensor	★
150T	1 / 3.3 MHz 6 in. (150 mm) gap tank sensor	★
200T	1 / 3.3 MHz 8 in. (200 mm) gap tank sensor	★
300T	1 / 3.3 MHz 12 in. (300 mm) gap tank sensor	★
450T	1 / 3.3 MHz 18 in. (450 mm) gap tank sensor	★
100	1 / 3.3 MHz flanged PN10/PN16 DN100 pipe section with gap sensors	★
150	1 / 3.3 MHz flanged PN10/PN16 DN150 pipe section with gap sensors	★
200	1 / 3.3 MHz flanged PN10 DN200 pipe section with gap sensors	★
A10	1 / 3.3 MHz flanged ASME B16.5 Class 150 4 in. (100 mm) pipe section with gap sensors	★
A15	1 / 3.3 MHz flanged ASME B16.5 Class 150 6 in. (150 mm) pipe section with gap sensors	★
A20	1 / 3.3 MHz flanged ASME B16.5 Class 150 8 in. (200 mm) pipe section with gap sensors	★
Spray Valve		
Standard		**Standard**
V	Spray valve (pipe section only code)	★
P	No spray valve (pipe section only code)	★
Cable Length(2)		
Standard		**Standard**
D / M07	23 ft. (7 m) cable	★
Typical Model Numbers: MSM433A150TD/M07 or MSM448AA15VD/M07		

(1) Sensor size selection depends on the application. If in doubt, please contact Rosemount Measurement to ensure that the size is suitable for the application.

(2) For other cable lengths, contact Rosemount Measurement. The maximum cable length is 164 ft. (50 m).

Material selection

- Emerson provides a variety of products with various product options and configurations including materials of construction that can be expected to perform well in a wide range of applications. The product information presented is intended as a guide for the purchaser to make an appropriate selection for the application. It is the purchaser's sole responsibility to make a careful analysis of all process parameters (such as all chemical components, temperature, pressure, flow rate, abrasives, contaminants, etc.), when specifying product, materials, options and components for the particular application. Emerson Process Management is not in a position to evaluate or guarantee the compatibility of the process fluid or other process parameters with the product, options, configuration or materials of construction selected.

Specifications for Control Unit

Product

- Mobrey MSM400 control unit

Physical

Mounting style

- Wall mount (brackets included)
- Six mounting holes, 0.2 in. (5 mm) diameter

Display

- Integral 32 x 122 pixels LCD with backlight, providing up to four lines of characters

Keypad

- Integral membrane keypad with six buttons for menu system navigation and configuring the application

Conduit/cable entries

- Six conduit/cable entry positions, pre-drilled at bottom of the enclosure
- Supplied with three M20 glands and three M16 glands

Dimensions

- See "Dimensional Drawings" on page 173

Construction materials

- ABS enclosure with clear polycarbonate lid
- 304-grade stainless steel cover-fixing screws
- UV resistant polycarbonate membrane keypad
- Nylon cable glands and blanking/stopping plugs

Electrical

General

- Cage clamp terminal blocks in separate compartment
- Maximum wire size is 2.5 mm^2 (12 AWG)

Power supply input connections

- Alternating Current (AC) mains and Direct Current (DC) terminal connections on each control unit for external supply
- Auto-selection of AC or DC supply, allowing back-up if one power supply fails

AC power supply requirements:

- 115 or 230 Vac ±15% (switch selectable)
- Power consumption: 10 VA nominal
- Fuse (F1): 200 mA (T), 5x20 mm, 240 V

DC power supply requirements:

- 15 to 30 Vdc, 24 Vdc nominal
- Power consumption: 6 W nominal

Sensor input connections

- Captive screw terminal block for 1 x ultrasonic gap sensor (Mobrey MSM433 or Mobrey MSM448)
- 1 MHz or 3.3 MHz operating frequency auto-selection

Digital input connections

- Accepts two 5 Vdc trigger input signals
- 5 Vdc provided by control unit

Other input connections

- Field communicator connection points (HART test points A and B)

Current output connections

- Nominal signal range 4–20 mA (default) or 0–20 mA, software selectable
- Full output range (linear): 3.8 to 20.5 mA

  (See Table A-1 on page A-3 for current saturation and alarm indication levels)
- Load: maximum resistance is 1 K Ohm at 22 mA
- Maximum applied voltage: 48 Vdc
- Isolated from other terminals to 500 Vdc
- Update rate (software): 10 times every second

Relay output connections

- Two SPDT (single-pole-double-throw) relays, rated 5 A at 240 Vac resistive

Environment

Ambient temperature

- –22 to 131 °F (–30 to 55 °C)

Relative humidity

- 95%

Enclosure rating

- IP65 indoor and outdoor

Certifications

See "Product Certifications" on page 172 for certified approvals.

Specifications for Tank-mountable Sensors

Product

- Mobrey MSM433 tank-mountable ultrasonic gap sensor, 316 Stainless steel, 1 MHz / 3 MHz operating frequency
- Gap size 4, 6, 8, 12, or 18 in (100, 150, 200, 300, or 450 mm)

Connections

Mounting connection

- ¾-in. BSPT

Sensor cable

- 23 ft. (7m) dual screened/shielded twisted pair (others upon request)
- Ready to connect to the MSM400 control unit

Environment

Operating temperature

- –40 to 130 °F (–40 to 55 °C)
- Up to +212 °F (+100 °C) upon request
- See "Product Certifications" on page 172 for approval temperature ranges

Operating pressure

- 1522 psi (105 bar)

Ingress protection

- IP68

Certifications

See "Product Certifications" on page 172 for certified approvals.

Specifications for Pipe-section with Sensors

Product

- Mobrey MSM448 pipe-section with integral 316 stainless steel ultrasonic gap sensor, 1 MHz / 3 MHz operating frequency
- Gap size 4, 6, 8, 12, or 18 in (100, 150, 200, 300, or 450 mm), depending on pipe size/flange choice

Physical

Pipe-section material

- Epoxy-coated carbon steel

Spray nozzle/flushing valve

- 1-in. BSP thread,
- 316 stainless steel wetside

Drain fitting

- 1-in. NPT

Connections

Mounting connection

- Raised Face (RF) flanged in-line installation
- EN1092-1 DN100 (PN 10/PN 16), DN150 (N 10/PN 16), DN200 (PN 10) or 4-in., 6-in., 8-in. ASME B16.15 Class 150

Sensor cable

- 23 ft. (7m) from junction box, oil hose protected, dual screened twisted pair (others upon request)
- Ready to connect to the MSM400 control unit

Cable junction box

- IP65 aluminum alloy

Environment

Operating temperature

- –40 to 158 °F (–40 to 70 °C)

Operating pressure

- 145 psi (10 bar)

Ingress protection

- IP68

Certifications

See "Product Certifications" on page 172 for certified approvals.

Product Certifications

Approved manufacturing location

Rosemount Measurement Limited

Slough, United Kingdom

European directive information

The EC declaration of conformity for all applicable European directives for this product can be obtained by contacting your local sales office.

ATEX directive (94/09/EC)

- The control unit and gap sensors comply with EN60079-0 and EN60079-11

Low voltage directive (2006/95/EC)

- The control unit complies with EN61010-1
- The gap sensors are outside the scope of the LVD directive

Pressure equipment directive (PED) (97/23/EC)

- The control unit and in-tank mounted gap sensor are outside the scope of the PED Directive
- The pipe-section gap sensor complies with the PED directive

Electro magnetic compatibility (EMC) directive (2004/108/EC)

- The control unit and sensors comply with EN 61326-1

CE-mark

- The control unit and sensors comply with the applicable directives

Hazardous location certifications

The MSM400 control unit ("control unit") may be connected to an intrinsically safe gap sensor located in a hazardous area. The control unit must not itself be located in a hazardous area.

Control unit approvals

ATEX intrinsically safe approval (gap sensor inputs only)

Certificate numbers: ITS00ATEX2002X
Intrinsically safe for II (1) G, (Ga) [Ex ia] IIC
Ambient temperature: –40 to +55 °C

Channel 1 (Rx) electrical parameters:
Uo = 1.2 V, Io = 42.1 mA, Po = 13 mW, Co = 0.4 nF, Lo = 0.04 mH

Channel 2 (Tx) electrical parameters:
Uo = 4.6 V, Io = 162 mA, Po = 0.2 W, Co = 0.4 nF, Lo = 0.04 mH

IECEx intrinsically safe approval (gap sensor inputs only)

Certificate numbers: IECEx ITS 13.0044X
Intrinsically safe for (Ga) [Ex ia] IIC
Ambient temperature: –40 to +55 °C

Channel 1 (Rx) electrical parameters:
Uo = 1.2 V, Io = 42.1 mA, Po = 13 mW, Co = 0.4 nF, Lo = 0.04 mH

Channel 2 (Tx) electrical parameters:
Uo = 4.6 V, Io = 162 mA, Po = 0.2 W, Co = 0.4 nF, Lo = 0.04 mH

Gap sensor approvals

ATEX intrinsically safe approval

A Certificate numbers: ITS00ATEX2003X
Intrinsically safe for II 1 G, Ex ia IIC T6...T3 Ga
Ambient temperature: –40 to +70 °C

Electrical parameters:
Ui = 4.6 V, Ii = 162 mA, Pi = 0.2 W, Ci = 14 nF, Li = 0.1 mH

IECEx intrinsically safe approval

A Certificate numbers: IECEx ITS 13.0044X
Intrinsically safe for Ex ia IIC T6...T3 Ga
Ambient temperature: –40 to +70 °C

Electrical parameters:
Ui = 4.6 V, Ii = 162 mA, Pi = 0.2 W, Ci = 14 nF, Li = 0.1 mH

Dimensional Drawings

Control unit

Note: Dimensions are in inches (mm).

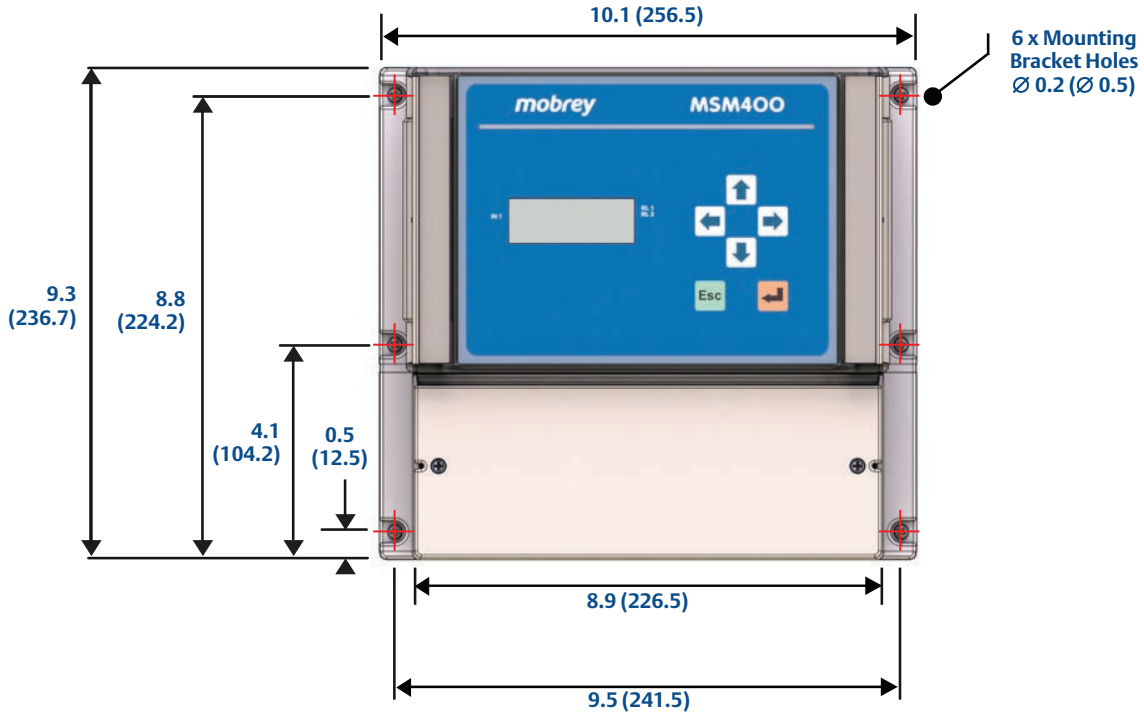

Sensors

Note: Dimensions are in inches (mm).

MSM433 In-tank Sensor

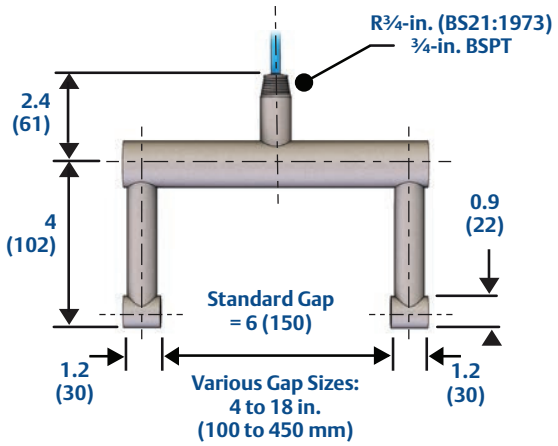

MSM448 Pipe-section Sensor

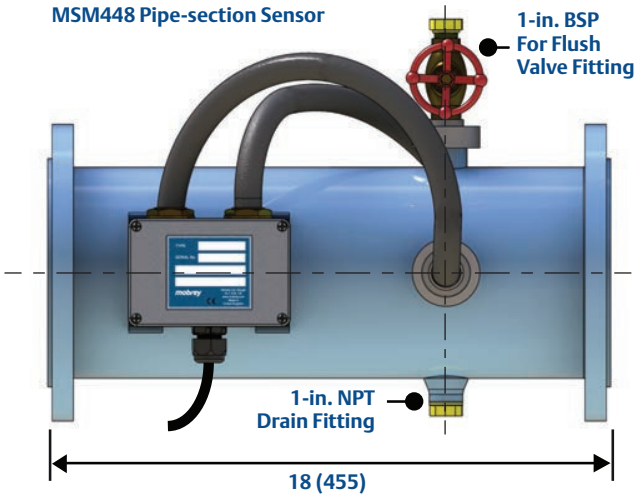

The Emerson logo is a trademark and service mark of Emerson Electric Co.
Rosemount is a registered trademark of Rosemount Inc.
Mobrey is a registered trademark of Rosemount Measurement Ltd.
All other marks are the property of their respective owners.
Standard Terms and Conditions of Sale can be found at www.rosemount.com\terms_of_sale

© 2014 Rosemount Measurement Limited. All rights reserved.

Emerson Process Management
Rosemount Measurement Ltd.
158 Edinbugh Avenue,
Slough, Berks., SL1 4UE, UK
Tel +44 (0)1753 756600
Fax +44 (0)1753 823589
www.emersonprocess.com

Emerson Process Management
Rosemount Inc.
8200 Market Boulevard
Chanhassen, MN 55317, USA
Tel (USA) 1 800 999 9307
Tel (International) +1 952 906 8888
Fax +1 952 906 8889

mobrey

EMERSON™
Process Management

Product Data Sheet
February 2015
IP119

Mobrey MLT100

Displacer Level Transmitter

- Level, contents or interface measurement transmitter
- Direct or external chamber mounting
- Two-wire 24 Vdc loop-powered
- 4–20 mA HART® output
- ATEX Intrinsically safe and explosion-proof certified versions

mobrey

EMERSON™
Process Management

Overview of the Mobrey MLT100

Mobrey MLT100 Transmitter With Optional Display Fitted

Mobrey MLT100 Transmitter in a Side-and-bottom Chamber

The Mobrey MLT100 Level Transmitter is one of the most advanced displacer based devices on the market, coupling the time proven buoyancy principle with state of the art electronics in an instrument of high reliability and stability.

Special care has been taken in design to ensure a small mounting envelope is maintained, resulting in reduced weight and associated savings in mounting.

The displacer element is made to length for each order, and is suspended below the head on a stable spring arrangement which is designed to minimise friction effects and improve performance.

The transmitter can be mounted directly into a vessel or may be externally mounted in a chamber to allow isolation for planned maintenance or in-situ calibration checks.

Operation

The 4–20 mA output from the head is proportional to the level or contents in the vessel, or may be set to follow an interface. The transmitter supports the HART protocol, which is superimposed on the 4–20 mA signal.

Changes of liquid level in the vessel cause the displacer element, which is supported on a spring, to rise or fall. A core, located in the pressure tube of the head, is connected to the displacer and moves linearly up and down with the element. Around the outside of the pressure tube in the head is a Linear Variable Differential Transformer (LVDT), the output of which is proportional to the position of the core. The pressure tube is made of stainless steel and is welded to the union which connects the head to the process pressure and temperature.

The user can operate the transmitter without digital communications, or can take advantage of the many features of HART such as remote calibration, re-ranging, on-line diagnostics, and multidrop installations.

Features

- Two-wire 24 Vdc loop-powered
- 4–20 mA output
- Unique ‘Caliplug’ for local configuration and calibration
- HART communications
- EExd or EExia certification
- Simple local or remote calibration
- Non-interactive Zero and Span
- High temperature remote electronics option (available to special order)
- Optional display for local indication of measurement
- Range of wetside materials

Contents

Overview of the Mobrey MLT100 . . . . . page 176
Mobrey MLT100 Transmitter Ordering . . . . . page 178
Specifications . . . . . page 180
Dimensions . . . . . page 181
Product Certifications . . . . . page 182

Benefits

- Low maintenance
- Simple installation
- Local or remote calibration

Typical applications

- Knock-out pots
- Condensate drums
- Separators
- Flash vessels
- Storage vessels
- Receiver tanks

Operating wetside temperatures are –60 to 320 °C at pressures between full vacuum and 200 bar. Remote electronics models available to special order for high temperature and nuclear applications.

Most liquids can be measured, with wetted materials chosen to suit. The liquid SG range is from 0.5 to 1.5, and interfaces with as low an SG difference of 0.1 are also practical.

The displacer length is dictated by the operating range requested, and the diameter and weight are factory calculated to ensure the correct operating movement of the core in the head. The longest standard operating range is 3000 mm.

Special features

Health-check LED

Each transmitter is fitted with a visible LED which flashes once every 3 seconds to show the instrument is healthy and working.

Field adjustments

The transmitter is set up by Rosemount Measurement to operate in the conditions advised at the time of order, and the displacer element dimensions are chosen to suit.

Local Calibration (Without a Field Communicator)

Fine-tune adjustments on-site may be made with the instrument in an empty vessel at 200 °C, which ensures correct readings at operating conditions.

Several adjustments can be made using the unique “Mobrey Magnetic Scroller” (MMS) and the “Caliplug”.
The MMS is a calibration tool with a magnetic tip, and is used on this and other Rosemount Measurement instruments to access and adjust certain operating parameters.

The MLT100 is fitted with a calibration plug (Caliplug) which contains docking ports for the MMS along with a heartbeat LED. The adjustments which may be made are setting the 4 mA and 20 mA points, and damping.

Remote calibration
(*not necessary for standard 4–20 mA operation*)

Ranging can be carried out remotely using a Field Communicator to establish digital communications and set the 4 and 20mA points electronically without the need for changing the liquid level. All the remaining operating, diagnostic, and Process Value (PV) data is also available using a Field Communicator.

Local indication display (optional)

The optional multi-function LCD indicator is housed in a cast aluminum Exd enclosure, and finished in a two-pack epoxy white paint. The 2-line LCD display can be programmed to show the output in %, engineering units, and other operating parameters by using a Field Communicator.

Mobrey MLT100 Transmitter Ordering

The following information must be supplied at time of order:

- Operating pressure, temperature, specific gravities (upper and lower), and viscosity
- Liquid and nature of vapour (condensing or non-condensing)
- Maximum or design pressures and temperatures
- Ambient temperature and local environmental conditions
- Operating range (taken as the process connection centres unless otherwise stated)
- Mounting arrangement and specific construction materials required.
  (If a chamber is required, please specify all relevant dimensions. Non-standard configurations may be made to special order)
- Any options: Display, chamber connections or vent/drain, special paint, inspection and NDT requirements, or other

Table 1. Mobrey MLT100 ordering information

Model	Product Description
LT	Mobrey level transmitter
Flange Material	
C	Carbon steel
S	Stainless steel
N	No flange (1-in. NPT connection)
Flange Mounting	
60	3-in. ASME B16.5 Class 150 Raised Face (RF)
61	3-in. ASME B16.5 Class 300 Raised Face (RF)
62	3-in. ASME B16.5 Class 600 Raised Face (RF)
63	3-in. ASME B16.5 Class 900 Raised Face (RF)
64	3-in. ASME B16.5 Class 1500 Ring Type Joint (RTJ)
65	4-in. ASME B16.5 Class 150 Raised Face (RF)
66	4-in. ASME B16.5 Class 300 Raised Face (RF)
67	4-in. ASME B16.5 Class 600 Raised Face (RF)
68	4-in. ASME B16.5 Class 900 Raised Face (RF)
69	4-in. ASME B16.5 Class 1500 Ring Type Joint (RTJ)
71	DN80 PN16
72	DN80 PN25
73	DN80 PN40
76	DN100 PN16
77	DN100 PN25
78	DN100 PN40
00	No flange (1-in. NPT connection)
Enclosure	
TS	IP66 enclosure certified EExia for Intrinsic Safety (IS) use, Cast Iron, white epoxy painted.
TF	IP66 Flameproof enclosure certified EExd for hazardous area use, Cast Iron, white epoxy painted
TR	IP66 enclosure certified EExd with electronics in a remote IP66 aluminium enclosure. Note: Remote electronics must be in the non-hazardous area.
TX	IP66 enclosure certified EExia for Intrinsic Safety (IS) use, 316 stainless steel.
Pressure Tube Type – *Select Type A or B using Figure 1 on page 180*	
A	Standard (up to 224 °C condensing)
B	High temperature (224 °C to 277 °C condensing; 320 °C non-condensing, remote electronics to 320 °C condensing)
Display	
D	Display
N	No display

Product Selection
Contents

Table 1. Mobrey MLT100 ordering information

Spring	
*	The code for the spring will be selected by Rosemount Measurement at time of ordering or a quotation is given
Displacer	
*	The code for the displacer will be selected by Rosemount Measurement at time of ordering or a quotation is given
Chamber Type and Orientation	
A	No chamber
B	Side/bottom, no vent
C	Side/bottom, 1/2-in. NPT vent
D	Side/bottom, 3/4-in, NPT vent
F	Side/bottom, 3/4-in, flanged vent
G	Side/side, no vent, 1/2-in. NPT drain
H	Side/side, no vent, 3/4-in. NPT drain
J	Side/side, no vent, 1-in. NPT drain
K	Side/side, 1/2-in. NPT drain and vent
L	Side/side, 3/4-in NPT drain and vent
M	Side/side, 1-in. NPT drain and vent
N	Side/side, no vent, 3/4-in. drain
P	Side/side, 3/4-in. NPT vent, 3/4-in. flanged drain
Q	Side/side, 3/4-in. flanged drain and vent
Chamber Process Connections	
01	Screwed 1-in. NPT
00	No Chamber
11	1-in. ASME B16.5 Class 150 Raised Face (RF) flange
12	1-in. ASME B16.5 Class 300 Raised Face (RF) flange
13	1-in. ASME B16.5 Class 600 Raised Face (RF) flange
14	1-in. ASME B16.5 Class 900 Raised Face (RF) flange
18	1-in. ASME B16.5 Class 1500 Ring Type Joint (RTJ) flange
15	DN25 PN16
16	DN25 PN25
17	DN25 PN40
21	1 1/2-in. ASME B16.5 Class 150 Raised Face (RF) flange
22	1 1/2-in. ASME B16.5 Class 300 Raised Face (RF) flange
23	1 1/2-in. ASME B16.5 Class 600 Raised Face (RF) flange
24	1 1/2-in. ASME B16.5 Class 900 Raised Face (RF) flange
28	1 1/2-in. ASME B16.5 Class 1500 Ring Type Joint (RTJ) flange
25	DN40 PN16
26	DN40 PN25
27	DN40 PN40
31	2-in. ASME B16.5 Class 150 Raised Face (RF) flange
32	2-in. ASME B16.5 Class 300 Raised Face (RF) flange
33	2-in. ASME B16.5 Class 600 Raised Face (RF) flange
34	2-in. ASME B16.5 Class 900 Raised Face (RF) flange
38	2-in. ASME B16.5 Class 150 Raised Face (RF) flange
35	DN50 PN16
36	DN50 PN25
37	DN50 PN40
Typical Model Number: LT C 61 TS A D * * B 11	

Specifications

Output

- 4–20 mA / HART digital

Range

- 11.8 to 118 in. / 300 to 3000 mm (to order)

Maximum operating pressure

- 2900 psi (200 bar)

Minimum operating pressure

- Full vacuum

Specific gravity range

- Standard: 0.5 to 1.5
- Interface: 0.1 difference

Maximum operating temperatures

- 530 °C (277 °C) condensing
- 608 °F (320 °C) non-condensing
- 608 °F (320 °C) condensing with remote electronics

Minimum operating temperature

- –76 °F (–60 °C)

Ambient temperature

- –40 to 176 °F / –40 to 80 °C (subject to process temperature)

Accuracy

- < ±1% of output span

Repeatability

- ±0.2% of output span

Linearity

- 0.2% of output span

Resolution

- 0.1% of output span

Hysteresis

- 0.3% of output span

Power supply

- 12 to 40 Vdc loop-powered

Power consumption

- 21 mA / 40 V: 840 mW maximum

Pressure Tube Types A and B

- See "Graphs for selecting a pressure tube type" on page 180

Materials of Construction

- The transmitter head is manufactured from cast iron with a paint finish of two-pack Epoxy white paint suitable for offshore/coastal use. It is weatherproof to IP66 / IP67 ratings.
- Wetted parts are made from stainless steel, including the element, trim, and pressure tube, except for the spring which is manufactured from a specialist corrosion resistant spring material, NIMONIC, chosen for it's stability and repeatability under changing process conditions.

Optional Chamber

- The material used is either as specified on the order or selected by Rosemount Measurement to suit the application. Only certified materials are used, and welding is qualified to ASME IX, BS EN 287, and EN ISO 15614-1. All pressure retaining parts are hydrostatically pressure tested to a minimum of 1.5 times working pressures. NDT including radiography and dye penetrant testing is available when specified at time of ordering. Inspection by customers or their appointed agents is welcome provided that this is requested at time of ordering.
- Option:
  Wetside materials in Alloy C276 (UNS N10276), Alloy 625 (UNS N06625), and others on request
- Option:
  compliance with NACE MR-01-75 for sour service duty

Figure 1. Graphs for selecting a pressure tube type

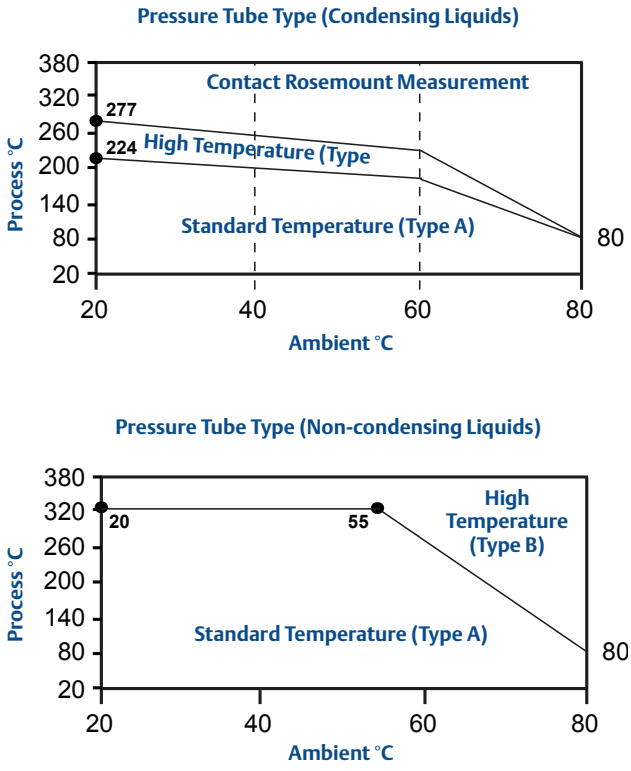

Dimensions

Figure 2. MLT100 with Optional Display

Note: Dimensions are in mm.

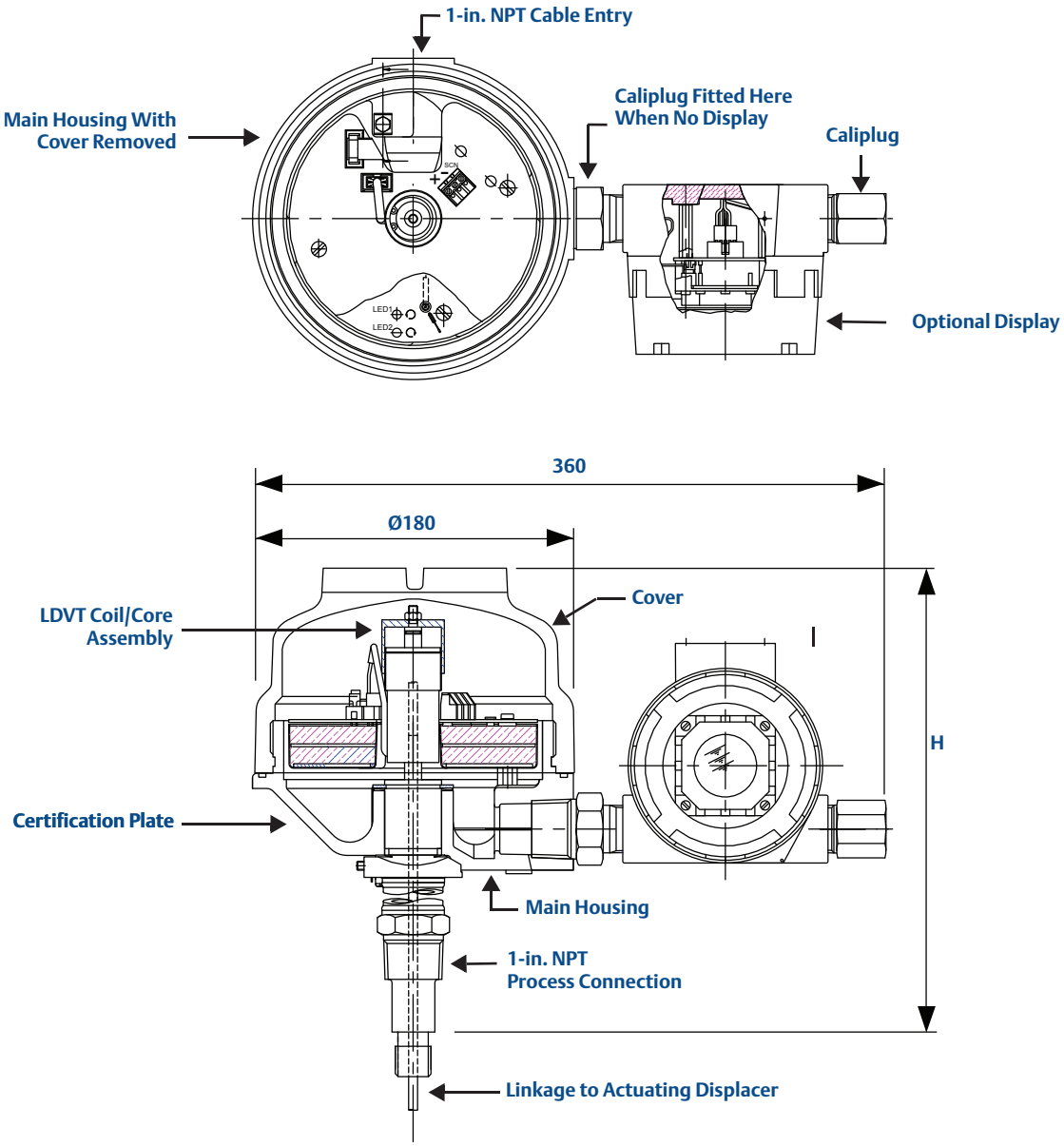

Table 2. Head height dimension H

Head Height	H
Pressure Tube A	200 mm
Pressure Tube B	422 mm
Note: allow an extra 90 mm for cover removal	

Product Certifications

Approved manufacturing location

Rosemount Measurement Limited, Slough, United Kingdom

European directive information

The EC declaration of conformity certificate for all applicable European directives for this product can be found on the Mobrey brand pages at www.emersonprocess.com. A hard copy may be obtained by contacting your local sales office.

ATEX Directive (94/9/EC)

- The MLT100 complies with the ATEX directive

Pressure Equipment Directive (PED) (97/23/EC)

- The MLT100 complies with the PED directive

Electro Magnetic Compatibility (EMC) Directive

- EN 61326-1:2006, EN 61326-2.3:2006

Hazardous locations certifications

ATEX intrinsically safe approval (enclosure code TS only)

Certificate number: Sira 03ATEX2153X
II 1 G
II 1 D (T90 °C)
EEx ia IIC T5 (T_a = –40 to 40 °C)
EEx ia IIC T4 (T_a = –40 to 80 °C)
Input parameters:
U_i = 28 Vdc, I_i = 93 mA, P_i = 0.66 W, C_i = 48 nF, L_i = 0.22 mH
Output parameters
(at the programming/calibration connector):
U_o = 18 Vdc, I_o= 93 mA, P_o = 0.44 W, C_o = 0.309 µF, L_o = 4.2 mH

ATEX intrinsically safe approval (enclosure code TX only)

Certificate number: Sira 04ATEX2206X
II 1 G
EEx ia IIC T5 (T_a = –40 to 40 °C)
EEx ia IIC T4 (T_a = –40 to 80 °C)
Input parameters:
U_i = 28 Vdc, I_i = 93 mA, P_i = 0.66 W, C_i = 48 nF, L_i = 0.22 mH
Output parameters
(at the programming/calibration connector):
U_o = 18 Vdc, I_o= 93 mA, P_o = 0.44 W, C_o = 0.309 µF, L_o = 4.2 mH

ATEX EEx ia special conditions for safe use

1. The enclosure may be manufactured from alloys containing light metals. In rare cases, ignition sources due to impact and friction sparks could occur. This shall be considered when the equipment is installed in locations that specifically require group II, category 1G equipment.

ATEX flameproof approval (enclosure codes TF and TR only)

Certificate number: Sira 03ATEX1190X
II 1/2 G
II 1/2 D (T85 °C)
EEx d IIC T6 (T_a = –40 to 75°C)

ATEX EEx d special conditions for safe use:

1. The enclosure must not be opened when a flammable atmosphere is present, even when the equipment has been electrically isolated.
2. The partition wall may not be stainless steel (see page 181), therefore the MLT100 shall not be subjected to environmental stresses that might adversely affect the partition wall.
3. The float or mounting flange may be a non-metallic material. The user must ensure suitability for the application and not ignition capable due to electrostatic charging. Do not rub with a dry cloth.

The Emerson logo is a trademark and service mark of Emerson Electric Co.
Rosemount is a registered trademark of Rosemount Inc.
Mobrey is a registered trademark of Rosemount Measurement Ltd.
All other marks are the property of their respective owners.
Standard Terms and Conditions of Sale can be found at www.rosemount.com\terms_of_sale

© 2015 Rosemount Measurement Limited. All rights reserved.

Emerson Process Management
Rosemount Measurement Ltd.
158 Edinbugh Avenue,
Slough, Berks., SL1 4UE, UK
Tel +44 (0)1753 756600
Fax +44 (0)1753 823589
www.emersonprocess.com

Emerson Process Management
Rosemount Inc.
8200 Market Boulevard
Chanhassen, MN 55317, USA
Tel (USA) 1 800 999 9307
Tel (International) +1 952 906 8888
Fax +1 952 906 8889

mobrey

EMERSON
Process Management

Product Data Sheet
February 2015
IP0078

Mobrey 9700 Transmitter

Submersible Hydrostatic Level Transmitters

- Hydrostatic electronic level transmitters
- Factory sealed and tested for submersed duty
- 4–20 mA output signal proportional to level
- Flush mounted ceramic sensor
- Good long term stability
- Ideal for industrial or marine applications
- Wide range of mounting options
- Low cost installation
- Readouts for control room or plant mounting

mobrey

EMERSON™
Process Management

Reliable Performance...In Challenging Applications

Mobrey 9710 Transmitter

Mobrey 9720 Transmitter

Mobrey 9780 Transmitter

Mobrey 9790 Transmitter

Mobrey 9700 Series transmitters

The 9700 Series range of tank level transmitters from Mobrey provide the measurement solution where in-tank problems such as foaming, vapor layers, and temperature gradients prohibit the use of other instrumentation.

The 9700 Series transmitter is designed to perform in the extreme conditions of today's industrial measurement applications.

Transmitters are available in both submersible and externally mounted (floodable) versions. Each transmitter version gives a high performance, has good long term stability, and is virtually maintenance free. A ceramic sensor ensures precise and reliable measurement with an accuracy of better than 0.1%.

Operation

At the heart is a Ceramic Capacitive Sensor (CCS). This pressure sensor provides a "flush" diaphragm, avoiding the risks of sensor clogging and ensures an extremely low hysteresis, minimal output drift, and high repeatability.

The sensor is manufactured using an aluminium oxide ceramic and provides outstanding resistance to chemical attack. The measuring range is determined by the ceramic thickness, which is precisely controlled during the manufacturing process. The sensor works like a capacitor with electrode surfaces on the inside comprising one measuring and one reference capacitor.

The surfaces of the capacitors are gold-plated and linked to ASIC electronics. These electronics generate a signal proportional to the applied pressure, which is sent to the 4–20 mA signal conditioner.

Product Selection

Contents

Contents

Mobrey 9700 Series transmitters ..... page 186
Mobrey 9710 Hydrostatic Level Transmitter Ordering page 188
Mobrey 9720 Hydrostatic Level Transmitter Ordering page 190
Mobrey 9780 Hydrostatic Level Transmitter Ordering page 192
Mobrey 9790 Hydrostatic Level Transmitter Ordering page 194
Specifications for 9710, 9720, 9780, and 9790 ..... page 196
Product Certifications ..... page 197

Features

- Two-wire 24 Vdc loop-powered
- 4 to 20 mA
- Accuracy ± 0.1% of calibrated span
- Ranges up to 200 m / 656 ft. H_20, and 10:1 rangeability
- Ceramic capacitive sensor
- Low maintenance
- Fully submersible IP68 / NEMA 6P
- Reverse polarity protection
- Dedicated marine version

Benefits

- Unaffected by difficult ullage conditions
- Stable readings under adverse conditions

Special features

Accuracy better than ±0.1% of calibrated span

The ceramic sensor is a “dry cell”, meaning that no isolating diaphragm and fill fluid is needed. The process fluid acts directly onto the rugged, corrosion resistant sensor.

The 9700 Series provides an accuracy of better than ±0.1% of calibrated span and good long term stability.

Protected from aggressive environments/processes

The 9700 Series withstands the harshest of environments and processes. Its rugged ceramic sensor is inherently capable of withstanding attack from most chemicals.

Glanding system

The glanding system used with the submersible versions ensures absolute integrity of the IP68 / NEMA 6P rating.

IP68 / NEMA 6P units are generally factory fitted with a length of vented cable.

Mounting options

The 9700 Series is available in various mounting configurations, all are rated IP68.

- 9710 – Cable suspended
- 9720 – Clamped, cable suspended
- 9780 – Pole mounted
- 9790 – Flanged

Bellows

For humid environments or sea water applications, bellows must be used (contact Rosemount Measurement for details).

Mobrey 9710 Hydrostatic Level Transmitter Ordering

Specification and selection of product materials, options, or components must be made by the purchaser of the equipment.
See page 196 for more information on Material Selections.

Table 1. Mobrey 9710 ordering information

★The Standard offering represents the most common options. The starred options (★) should be selected for best delivery.
The Expanded offering is subject to additional delivery lead time.

Model	Product Description		
9710	Cable Suspended Submersible Hydrostatic Level Transmitter		
Version			
Standard			**Standard**
C	Commercial		★
M	Marine approval		★
Material of Sensor			
Standard			**Standard**
S	Stainless steel 316		★
A	Aluminum bronze		★
Body Seal O-ring Material			
Standard			**Standard**
1	Fluorocarbon (FPM/FKM)		★
2	Nitrile		★
Nominal Range			
Standard			**Standard**
A	0 to 6.5 ft. (0 to 2 m) H_20 depth		★
B	0 to 16.4 ft. (0 to 5 m) H_20 depth		★
C	0 to 32.8 ft. (0 to 10 m) H_20 depth		★
D	0 to 65.6 ft. (0 to 20 m) H_20 depth		★
E	0 to 164 ft. (0 to 50 m) H_20 depth		★
F	0 to 328 ft. (0 to 100 m) H_20 depth		★
G	0 to 3.3 ft. (0 to 1 m) H_20 depth		★
H	0 to 11.5 ft. (0 to 3.5 m) H_20 depth		★
J	0 to 656 ft. (0 to 200 m) H_20 depth		★
Zero and Span			
Standard			**Standard**
1	Integral (fixed)		★
Cable Material			
Standard			**Standard**
P	Polyurethane		★
F	Fluorinated ethylene-propylene (F.E.P)		★
Cable Length Units			
Standard			**Standard**
E	English		★
M	Metric		★
Cable Length		**Metric / English**	
Standard			**Standard**
003	3 meters	M	★
005	5 meters	M	★
008	8 meters	M	★
010	10 meters	M	★
020	20 meters	M	★
030	30 meters / feet	M / E	★
040	40 meters	M	★

Table 1. Mobrey 9710 ordering information

★The Standard offering represents the most common options. The starred options (★) should be selected for best delivery.
The Expanded offering is subject to additional delivery lead time.

050	50 meters	M	★
060	60 meters	M	★
075	75 meters	M	★
100	100 meters	M	★
125	125 meters	M	★
150	150 meters / feet	M / E	★
200	200 meters	M	★
009	9 feet	E	★
015	15 feet	E	★
024	24 feet	E	★
060	60 feet	E	★
090	90 feet	E	★
120	120 feet	E	★
225	225 feet	E	★
300	300 feet	E	★
375	375 feet	E	★
450	450 feet	E	★
600	600 feet	E	★
Product Certifications			
Standard			**Standard**
NA	Non-certified (non-hazardous area use only)		★
A6	CSA (Canada and USA)		★
Typical Model Number: 9710 C S 1 A 1 P M 003 NA			

Options (add to end of model number)

Custom Configuration		
Expanded		
C1	Custom configuration of actual range (customer to specify with order)	
Example Model Number: 9710 C S 1 A 1 P M 003 NA C1		

Mobrey 9720 Hydrostatic Level Transmitter Ordering

Specification and selection of product materials, options, or components must be made by the purchaser of the equipment.
See page 196 for more information on Material Selections.

Table 2. Mobrey 9720 ordering information

★The Standard offering represents the most common options. The starred options (★) should be selected for best delivery.
The Expanded offering is subject to additional delivery lead time.

Model	Product Description		
9720	Clamped Cable Suspended Submersible Hydrostatic Level Transmitter		
Version			
Standard			**Standard**
C	Commercial		★
M	Marine approval		★
Material of Sensor			
Standard			**Standard**
S	Stainless steel 316		★
A	Aluminum bronze		★
Body Seal O-ring Material			
Standard			**Standard**
1	Fluorocarbon (FPM/FKM)		★
2	Nitrile		★
Nominal Range			
Standard			**Standard**
A	0 to 6.5 ft. (0 to 2 m) H_20 depth		★
B	0 to 16.4 ft. (0 to 5 m) H_20 depth		★
C	0 to 32.8 ft. (0 to 10 m) H_20 depth		★
D	0 to 65.6 ft. (0 to 20 m) H_20 depth		★
E	0 to 164 ft. (0 to 50 m) H_20 depth		★
F	0 to 328 ft. (0 to 100 m) H_20 depth		★
G	0 to 3.3 ft. (0 to 1 m) H_20 depth		★
H	0 to 11.5 ft. (0 to 3.5 m) H_20 depth		★
J	0 to 656 ft. (0 to 200 m) H_20 depth		★
Zero and Span			
Standard			**Standard**
1	Integral (fixed)		★
Cable Material			
Standard			**Standard**
P	Polyurethane		★
F	Fluorinated ethylene-propylene (F.E.P)		★
Cable Length Units			
Standard			**Standard**
E	English		★
M	Metric		★
Cable Length		**Metric / English**	
Standard			**Standard**
003	3 meters	M	★
005	5 meters	M	★
008	8 meters	M	★
010	10 meters	M	★
020	20 meters	M	★
030	30 meters / feet	M / E	★
040	40 meters	M	★
050	50 meters	M	★
060	60 meters	M	★
075	75 meters	M	★

Table 2. Mobrey 9720 ordering information

★The Standard offering represents the most common options. The starred options (★) should be selected for best delivery.
The Expanded offering is subject to additional delivery lead time.

100	100 meters	M	★
125	125 meters	M	★
150	150 meters / feet	M / E	★
200	200 meters	M	★
009	9 feet	E	★
015	15 feet	E	★
024	24 feet	E	★
060	60 feet	E	★
090	90 feet	E	★
120	120 feet	E	★
225	225 feet	E	★
300	300 feet	E	★
375	375 feet	E	★
450	450 feet	E	★
600	600 feet	E	★
Product Certifications			
Standard			**Standard**
NA	Non-certified (non-hazardous area use only)		★
A6	CSA (Canada and USA)		★
Typical Model Number: 9720 C S 1 A 1 P M 003 NA			

Options (add to end of model number)

Custom Configuration		
Expanded		
C1	Custom configuration of actual range (customer to specify with order)	
Example Model Number: 9720 C S 1 A 1 P M 003 NA C1		

Mobrey 9780 Hydrostatic Level Transmitter Ordering

Specification and selection of product materials, options, or components must be made by the purchaser of the equipment.
See page 196 for more information on Material Selections.

Table 3. Mobrey 9780 ordering information

All Mobrey 7980 instruments are manufactured as made-to-order items. Contact Rosemount Measurement for delivery lead times.

Model	Product Description		
9780	Pole Mounted Submersible Hydrostatic Level Transmitter		
Version			
C	Commercial		
M	Marine approval		
Material of Sensor and Pole			
S	Stainless steel 316		
A	Aluminum bronze		
Body Seal O-ring Material			
1	Fluorocarbon (FPM/FKM)		
2	Nitrile		
Nominal Range			
A	0 to 6.5 ft. (0 to 2 m) H_20 depth		
B	0 to 16.4 ft. (0 to 5 m) H_20 depth		
C	0 to 32.8 ft. (0 to 10 m) H_20 depth		
G	0 to 3.3 ft. (0 to 1 m) H_20 depth		
H	0 to 11.5 ft. (0 to 3.5 m) H_20 depth		
Zero and Span			
1	Integral (Fixed)		
Cable Material			
P	Polyurethane		
F	Fluorinated ethylene-propylene (F.E.P)		
Cable Length Units			
E	English		
M	Metric		
Cable Length		**Metric / English**	
003	3 meters	M	
005	5 meters	M	
008	8 meters	M	
010	10 meters	M	
020	20 meters	M	
030	30 meters / feet	M / E	
040	40 meters	M	
050	50 meters	M	
060	60 meters	M	
075	75 meters	M	
100	100 meters	M	
125	125 meters	M	
150	150 meters / feet	M / E	
200	200 meters	M	
009	9 feet	E	
015	15 feet	E	
024	24 feet	E	
060	60 feet	E	
090	90 feet	E	
120	120 feet	E	

Table 3. Mobrey 9780 ordering information

All Mobrey 7980 instruments are manufactured as made-to-order items. Contact Rosemount Measurement for delivery lead times.

225	225 feet	E	
300	300 feet	E	
375	375 feet	E	
450	450 feet	E	
600	600 feet	E	
Product Certifications			
NA	Non-certified (non-hazardous area use only)		
A6	CSA (Canada and USA)		
Process Connection			
B	Fixed flange, DN40 PN40 (DIN 2635)		
C	Fixed flange, DN50 PN40 (DIN 2635)		
D	Fixed flange, DN80 PN40 (DIN 2635)		
F	Fixed flange, 2-in. ASME B16.5 Class 150		
G	Fixed flange, 3-in. ASME B16.5 Class 150		
Overall Length Units			
E	English		
M	Metric		
Overall Length			
xxxx	mm or inches, depending on overall length units		
Typical Model Number: 9780 M S 1 C 1 P E 009 NA C E 300			

Options (add to end of model number)

Custom Configuration	
Expanded	
C1	Custom configuration of actual range (customer to specify with order)
Example Model Number: 9780 M S 1 C 1 P E 009 NA C E 300 C1	

Mobrey 9790 Hydrostatic Level Transmitter Ordering

Specification and selection of product materials, options, or components must be made by the purchaser of the equipment.
See page 196 for more information on Material Selections.

Table 4. Mobrey 9790 ordering information

★The Standard offering represents the most common options. The starred options (★) should be selected for best delivery.
The Expanded offering is subject to additional delivery lead time.

Model	Product Description		
9790	Flange Mounted Submersible Hydrostatic Level Transmitter		
Version			
Standard			**Standard**
C	Commercial		★
M	Marine approval		★
Sensor and Flange Material			
Standard			**Standard**
S	Stainless steel 316		★
A	Aluminum bronze		★
Body Seal O-ring Material			
Standard			**Standard**
1	Fluorocarbon (FPM/FKM)		★
2	Nitrile		★
Nominal Range			
Standard			**Standard**
A	0 to 6.5 ft. (0 to 2 m) H_20 depth		★
B	0 to 16.4 ft. (0 to 5 m) H_20 depth		★
C	0 to 32.8 ft. (0 to 10 m) H_20 depth		★
D	0 to 65.6 ft. (0 to 20 m) H_20 depth		★
E	0 to 164 ft. (0 to 50 m) H_20 depth		★
F	0 to 328 ft. (0 to 100 m) H_20 depth		★
G	0 to 3.3 ft. (0 to 1 m) H_20 depth		★
H	0 to 11.5 ft. (0 to 3.5 m) H_20 depth		★
J	0 to 656 ft. (0 to 200 m) H_20 depth		★
Zero and Span			
Standard			**Standard**
1	Integral (Fixed)		★
Cable Material			
Standard			**Standard**
P	Polyurethane		★
F	Fluorinated ethylene-propylene (F.E.P)		★
Cable Length Units			
Standard			**Standard**
E	English		★
M	Metric		★
Cable Length		**Metric / English**	
Standard			**Standard**
003	3 meters	M	★
005	5 meters	M	★
008	8 meters	M	★
010	10 meters	M	★
020	20 meters	M	★
030	30 meters / feet	M / E	★
040	40 meters	M	★

Table 4. Mobrey 9790 ordering information

★The Standard offering represents the most common options. The starred options (★) should be selected for best delivery.
The Expanded offering is subject to additional delivery lead time.

050	50 meters	M	★
060	60 meters	M	★
075	75 meters	M	★
100	100 meters	M	★
125	125 meters	M	★
150	150 meters / feet	M / E	★
200	200 meters	M	★
009	9 feet	E	★
015	15 feet	E	★
024	24 feet	E	★
060	60 feet	E	★
090	90 feet	E	★
120	120 feet	E	★
225	225 feet	E	★
300	300 feet	E	★
375	375 feet	E	★
450	450 feet	E	★
600	600 feet	E	★
Product Certifications			
Standard			**Standard**
NA	Non-certified (non-hazardous area use only)		★
A6	CSA (Canada and USA)		★
Process Connection			
Standard			**Standard**
A	Slip-on flange, DN25 PN40 (DIN 2635)		★
B	Fixed flange, DN40 PN40 (DIN 2635)		★
C	Fixed flange, DN50 PN40 (DIN 2635)		★
D	Fixed flange, DN80 PN40 (DIN 2635)		★
E	Slip-on flange, 1-in. ASME B16.5 Class 150		★
F	Fixed flange, 2-in. ASME B16.5 Class 150		★
G	Fixed flange, 3-in. ASME B16.5 Class 150		★
Typical Model Number: 9790 M S 1 A 1 P E 009 NA F			

Options (add to end of model number)

Custom Configuration		
Expanded		
C1	Custom configuration of actual range (customer to specify with order)	
Example Model Number: 9790 M S 1 A 1 P E 009 NA F C1		

Specifications for 9710, 9720, 9780, and 9790

Functional

Output signal
Two-wire, 4–20 mA

Power supply
10 to 30 Vdc

Load resistance
R=50 x (supply voltage - 10V) Ù

Measuring range
Up to 200 m / 656 ft. H_20

Overrange limit
5 x range up to a max 600 m / 1968 ft. H_20

Span adjustment
+10 to +100% of Upper Range Limit (URL)

Process temperature limit
9710, 9720, 9780: -20 to + 60 °C / -4 to +140 °F
9790: -20 to + 90°C (80 °C Ex ia)

Ambient temp. limits
-20 to +60 °C

Humidity limits
0 to 100% RH when terminated using a remote bellows box (contact Rosemount Measurement for details).

Hazardous area certification
See "Product Certifications" on page 197

Performance

Accuracy
±0.1% of calibrated span
(includes effects of linearity, hysteresis and repeatability)

Stability
± 0.1% Upper Range Limit (URL) per 6 months

Temperature effect
±0.015% Upper Range Limit (URL) per °C / °F
(over ambient temp. range)

Physical

Cable entry
Glanding system supplied with required length of vented cable

Materials selection
Emerson provides a variety of products with various product options and configurations including materials of construction that can be expected to perform well in a wide range of applications. The product information presented is intended as a guide for the purchaser to make an appropriate selection for the application. It is the purchaser's sole responsibility to make a careful analysis of all process parameters (such as all chemical components, temperature, pressure, flow rate, abrasives, contaminants, etc.), when specifying product, materials, options and components for the particular application.

Emerson Process Management is not in a position to evaluate or guarantee the compatibility of the process fluid or other process parameters with the product, options, configuration or materials of construction selected.

Wetted parts

Sensor
Ceramic

Sensor housing
316 Stainless steel, Aluminium bronze

Seal rings
Fluorocarbon (FPM/FKM), Nitrile

Cable
Polyurethane
Fluorinated Ethylyene Polypropylene (FEP)

Pole (9780 only)
316 Stainless Steel pole supplied with 316 Stainless Steel Housing option
Copper Nickel pole supplied Aluminium Bronze Housing option

Ingress protection
IP68 / NEMA 6P (200 m / 656 ft. H_20)

Approximate weight
0.7 Kg / 1.54 lbs (sensor only)

Product Certifications

Hazardous area certification

CSA (Canada and USA)

CL I, Div 1, Groups C and D
CL II, Div 1, Groups E, F and G
CL III
Ex ia IIB T4
AEx ia IIB T4

Marine approvals

- Lloyds Register
- American Bureau of Shipping
- Korean Register
- Germanisher Lloyd
- DNV
- RINA

The Emerson logo is a trademark and service mark of Emerson Electric Co.
Rosemount is a registered trademark of Rosemount Inc.
Mobrey is a registered trademark of Rosemount Measurement Ltd.
All other marks are the property of their respective owners.
Standard Terms and Conditions of Sale can be found at www.rosemount.com\terms_of_sale

© 2015 Rosemount Measurement Limited. All rights reserved.

Emerson Process Management
Rosemount Measurement Ltd.
158 Edinbugh Avenue,
Slough, Berks., SL1 4UE, UK
Tel +44 (0)1753 756600
Fax +44 (0)1753 823589
www.emersonprocess.com

Emerson Process Management
Rosemount Inc.
8200 Market Boulevard
Chanhassen MN 55317 USA
Tel (USA) 1 800 999 9307
Tel (International) +1 952 906 8888
Fax +1 952 906 8889

Conductivity water and steam interface monitoring

Mobrey 2468
Hydrastep electronic gauging system

- High reliability steam/ water electronic gauging system
- The ideal “fit and forget” solution to overcome the problems associated with unreliable, maintenance intensive gauge glasses
- Designed for totally reliable operation, Hydrastep is both fail-safe and fault tolerant
- Rugged electrodes fitted to a water column
- Red (steam) and green (water) indicators - which can be sited anywhere in the plant - display the water level
- An independent report by Factory Mutual Research concluded that the probability of Hydrastep missing a trip condition is less than 1 in 300 million and that nuisance trips will be less than 1 in 10 million

Mobrey 2462
Hydratect water/steam detection system

- Water detection /turbine water induction prevention (TWIP)
- Dual redundancy design. No single fault will cause system failure
- Built in diagnostics/ self-validating circuitry inform user of fault condition
- No maintenance costs and makes routine testing unnecessary
- Hydratect technology is recognized by insurance companies and reduces insurance premiums
- May be combined with the Rosemount 702 wireless discrete transmitter

For guidance in choosing the correct product for your application, please see the table on the next page.

Picture: Hydrastep Control Unit with Remote Displays (Panel Mount 24683C and Wall Mount 24683D), and Hydratect Control Unit

Specification and selection guide for conductivity steam/water interface monitoring

Click on the model name to turn to the page with the product data sheet

		Hydrastep	Hydratect
Applications	Steam drum level gauging	●	○
	Water / condensate level detection alarm	○	●
Water column	Carbon steel low pressure to 1740 psi (120 bar)	●	○
	Carbon steel high pressure to 3045 psi (210 bar)	●	○
	Carbon steel supercritical to 4350 psi (300 bar)	●	○
	Carbon steel manifold (optional)	○	●
Electrodes	Min 8 to Max 32 per water column	●	○
	2 per manifold or for local installation	○	●
Control unit	Stainless steel IP65 / Type NEMA4	●	●
	Power supply AC or DC to order	●	●
	Dual redundancy power supply option	●	○
	Electrode output / trip validation	●	●
Outputs	High visibility local LED indication	●	●
	High visibility remote LED indication	●	○
	4–20 mA	●	○
	Relays	●	●

TABLE KEY: Available ● Not available ○

Product data sheets index (*Specialized conductivity*)

Conductivity water and steam interface monitoring

Product Data Sheet: Hydrastep 2468 and Hydratect 2462 . . . . . page 200

Product Data Sheet
February 2015
BP2468

Hydrastep and Hydratect

Water/Steam Monitoring Systems

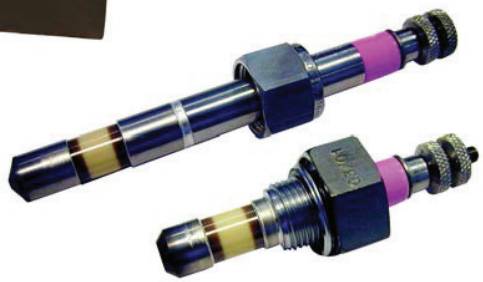

- High clarity electronic gauging system for steam drums with options of local and remote indication
- 4–20mA output proportional to drum level
- High reliability, low water level shutdown system
- Superior quality electrodes manufactured for long life and reliability
- Each system custom designed for your application to ensure minimum installation costs
- “Sole gauge” and ASME compliance with International approvals
- Hydratect for use as a Turbine Water Ingress Protection (TWIP) system

mobrey

EMERSON™
Process Management

Hydrastep 2468 Electronic Gauging System

Hydrastep Electronic Measuring Unit

Failure to detect low water levels in steam-raising plant can have costly and potentially disastrous consequences. Reliable water level detection is vital to prevent damage to plant and personnel.

The Hydrastep electronic gauging system is the ideal fit and forget' solution to overcome the problems associated with unreliable and maintenance- intensive gauge glasses.

Designed for totally reliable operation, Hydrastep is both fail-safe and fault tolerant.

Modern boilers are designed to provide clean, dry steam. Detection of incorrect water level in the drum is essential:

- Too high a level can give wet steam, leading to turbine blade erosion, and
- If the level is too low, the boiler tubes can overheat, with the danger of explosion.

All national legislatures require indication of water level in steam generating plant and drum level indication in the control room is absolutely necessary. Conversely however, false alarms leading to plant shutdown and loss of revenue are also highly undesirable.

Hydrastep offers exceptional levels of security. All measurements are interpreted as water, steam or contamination. Both short and open circuit conditions are detected and indicated as faults.

An independent report by Factory Mutual Research concluded that the probability of Hydrastep missing a trip condition is less than 1 in 300 million and that nuisance trips will be less than 1 in 10 million. Hydrastep combines optimum safety indication with virtually no risk of false alarms.

The Hydrastep system consists of a water column fitted with up to 32 electrodes, an electronic measuring unit, local and remote displays, and connecting cables.

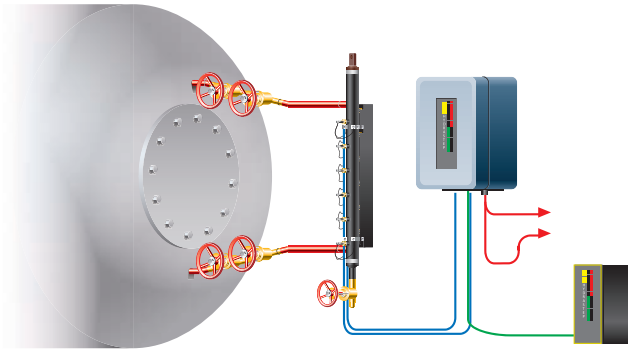

Contents

Hydrastep Ordering Information . . . . . page 203
Hydratect Ordering Information . . . . . page 206
Specifications . . . . . page 207
Dimensional Drawings . . . . . page 210

Hydratect 2462 Steam / Water Detection System

The Hydratect electronic water detection system is designed as an electronic alternative to conventional water level switches on steam raising plant.

It can be used in a wide variety of situations wherever the detection of water or steam is vital for safe and efficient operation.

The Hydratect 2462 system consists of electrodes, an electronic unit and a manifold or water column. Alternatively, inserts can be provided so that the electrodes can be fitted directly into existing pipework.

Designed to use the same water or steam detection system as Hydrastep, Hydratect provides much higher levels of reliability than conventional devices, and can be used in conjunction with Hydrastep level detection for ultimate protection. Hydratect provides local indication and configurable alarm / trip outputs.

The 2462 Hydratect is designed for:

- Fault tolerance
- Fail-safe operation
- Fully validated trips
- Detection of electrode contamination
- Detection of open circuit electrode connections
- Detection of fault ground connections

The 2462:

- Makes routine testing unnecessary
- Conforms to all existing standards and legislation
- Continuously verifies measurement integrity
- Is the most economical solution for all installations

Hydratect Electronic Unit

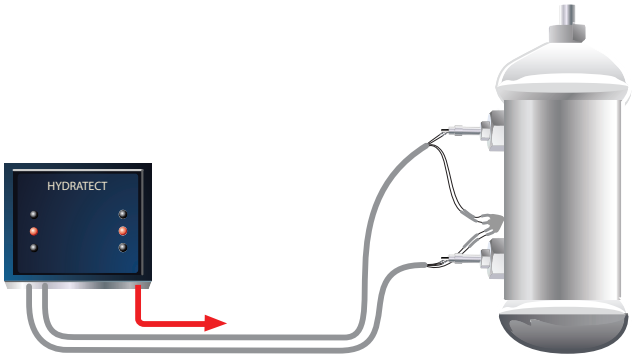

Water Column

Electrodes

Hydrastep Ordering Information

A Hydrastep electronic steam/water gauging system comprises:-

- Control unit (see Table 1)
- Water column (see Table 2 on page 204)
- Electrodes and electrode cables (see Table 4 on page 205)
- Remote display (optional see Table 6 on page 205)

Specification and selection of product materials, options, or components must be made by the purchaser of the equipment. See page 207 for more information on Material Selection.

Table 1. Hydrastep control unit ordering information

★The Standard offering represents the most common options. The starred options (★) should be selected for best delivery. The Expanded offering is subject to additional delivery lead time.

Model	Product Description	
2468	Hydrastep Control Unit	
Power Supply Input Boards		
Standard		**Standard**
CA	16 point EGS, single power supply (ac mains)	★
CB	32 point EGS, dual power supplies (2 x ac mains)	★
CC	16 point EGS, single power supply (24 Vdc)	★
CD	32 point EGS, dual power supplies (2 x 24 Vdc)	★
CE	32 point EGS, dual power supplies (1 x ac, 1 x dc)	★
Optional Output Boards		
Standard		**Standard**
AD	No output boards	★
BD	1 Relay output board (4 relays)	★
CD	2 Relay output boards (8 relays)	★
DD	4 Relay output boards (16 relays)	★
Expanded		
ED	1 Relay output board with time delay (4 relays)	
FD	2 Relay output boards with time delay (8 relays)	
GD	4 Relay output boards with time delay (16 relays)	
HD	1 Opto isolated output board (4 outputs)	
JD	2 Opto isolated output boards (8 outputs)	
KD	4 Opto isolated output boards (16 outputs)	
Typical Model Number: 2468 CB CD		

Table 2. Water column ordering information

★The Standard offering represents the most common options. The starred options (★) should be selected for best delivery. The Expanded offering is subject to additional delivery lead time.

Model	Product Description	
Standard		**Standard**
120	Low pressure (up to 1740 psi / 120 bar) water column (schedule 80 process connections) – see Table 3 on page 205	★
210	High pressure (up to 3045 psi / 210 bar) water column (schedule 160 process connections) – see Table 3 on page 205	★
Expanded		
300(1)	Super critical (up to 4350 psi / 300 bar) water column (schedule XXS process connections) – See Table 3 on page 205	
In-line Design		
Standard		**Standard**
L(2)	In-line design (top-and-bottom process connections)	★
No Code(2)(3)	Side-arm design (side-and-side process connections with hanger)	★
Distance Between Top and Bottom Tappings		
Standard		**Standard**
TTTT(4)	TTTT = Distance between top and bottom tappings (mm or inches)	★
Site Range		
Standard		**Standard**
SSSS(5)	SSSS = Distance between top and bottom electrodes (mm or inches)	★
Number Of Electrodes		
Standard		**Standard**
8	Eight electrode ports	★
10	Ten electrode ports	★
12	Twelve electrode ports	★
14	Fourteen electrode ports	★
16	Sixteen electrode ports	★
18	Eighteen electrode ports	★
20	Twenty electrode ports	★
22	Twenty two electrode ports	★
24	Twenty four electrode ports	★
26	Twenty six electrode ports	★
28	Twenty eight electrode ports	★
30	Thirty electrode ports	★
32	Thirty two electrode ports	★
Typical Model Numbers: **120-1250-900-24 (**Low Pressure Water Column**,** Side-and-side, 1250 mm Process Connection Centers**)** **210-L-43-37-16 (**High Pressure Water Column**,** Top-and-bottom, 37 in. Process Connection Centers**)**		

(1) Available to special order only.

(2) Specify the process connection size (25, 32, 38, or 50 mm) on the column design sheet, which is available from your local sales office.

(3) Water column with hanger design has side arm/side-and-side process connections. Specify the drain connection size (20 or 25 mm) on the column design sheet, which is available from your local sales office.

(4) Maximum tap-to-tap distance is 138 in. (3500 mm).

(5) Refer to water column design sheet available from your local sales office.

Table 3. Water column selection data

Parameter	LP Rectangular Section	HP Series 3	HP Super 3
Design Pressure	1740 psi (120 bar)	3045 psi (210 bar)	4350 psi (300 bar)
Test Pressure	2610 psi (180 bar)	4567 psi (315 bar)	6525 psi (450 bar)
Design Temp.	650 °F (343 °C)	698 °F (370 °C)	1040 °F (560 °C)
Design Code(1)	ASME B31.1 Power Piping	ASME B31.1 Power Piping	ASME B31.1 Power Piping
Maximum Length	138 in. (3500 mm)	138 in. (3500 mm)	138 in. (3500 mm)
Materials of Construction(2)	Carbon Steel ASTM A105/A106 GR B	Carbon Steel ASTM A105/A106 GR B body with SA 479 – 316N electrode mounts	Stainless steel ASTM A312/A182 F316 with SA 479 – 316N electrode mounts
Protective Covers	18 SWG (17 AWG) Stainless steel	18 SWG (17 AWG) Stainless steel	18 SWG (17 AWG) Stainless steel
Gross Weight(3)	26.5 lb (12 kg)	37.5 lb (17 kg)	37.5 lb (17 kg)
Electrode Types	459600602 or 459600802	246781ZA, 246782AC, or 246784AA	246785A

(1) Manufactured and tested in accordance with ASME Boiler and Pressure Vessel Code: Section 1.

(2) Material certification : in accordance with BS EN10204 3.1 (we can also provide to BS EN10204 3.2 at additional cost and if specified by Customer, prior to order).

(3) Typical for (610 mm / 24 in.) steam/water range, 12 port, with electrodes and covers.

Table 4. Electrodes and electrode cables ordering information

★The Standard offering represents the most common options. The starred options (★) should be selected for best delivery. The Expanded offering is subject to additional delivery lead time.

Model	Product Description	
Standard		**Standard**
459600602	Low pressure (LP) electrode – Zirconia insulator (see Table 5 for electrode data)	★
459600802	Low pressure (LP) electrode – PTFE insulator (see Table 5 for electrode data)	★
246781ZA	High pressure (HP) electrode – Series III, Zirconia insulator (see Table 5 for electrode data)	★
246782AC	High pressure (HP) electrode – Series III, PTFE insulator (see Table 5 for electrode data)	★
246784AA	High pressure (HP) electrode – Series III, Zirconia insulator, PTFE coated (see Table 5 for electrode data)	★
246785A	Super critical electrode – Series lll, ZTA Insulator (see Table 5 for electrode data), 1 in. (25 mm) fitting	★
24680204A	18-core electrode cable – 10 ft. (3 m). One cable is required for every multiple of eight electrodes	★
24680205A	18-core electrode cable – 33 ft. (10 m). One cable is required for every multiple of eight electrodes	★
24680206A	18-core electrode cable – 60 ft. (18 m). One cable is required for every multiple of eight electrodes	★
24680207A	18-core electrode cable – 98 ft. (30 m). One cable is required for every multiple of eight electrodes	★
Note: Do not mix electrode types. See Table 5 for further Hydrastep electrode data.		

Table 5. Hydrastep electrodes selection data

Part Number	Style	Material	Max Pressure PSI (Bar)	Max Temperature °F (°C)	ph Range
459600802	Threaded (LP column)	PTFE	725 (50)	500 (260)	7 to 13.5
459600602	Threaded (LP column)	Zirconia	1740 (120)	698 (370)	7 to 11
247682AC	Union (HP column)	PTFE	725 (50)	500 (260)	7 to 13.5
2467 84AA	Union (HP column)	Ceramic PTFE coated	4350 (300)	500 (260)	7 to 13.5
246781ZA	Union (HP column)	Zirconia	3045 (210)	698 (370)	7 to 11
246785A	Union (HP column)	ZTA	4350 (300)	1040 (560)	7 to 11

Table 6. Hydrastep accessories ordering information

★The Standard offering represents the most common options. The starred options (★) should be selected for best delivery. The Expanded offering is subject to additional delivery lead time.

Model	Product Description	
Standard		**Standard**
24683C	32 point remote display, large panel mount	★
24683D	32 point remote display, IP65 wall mount (Type NEMA 4)	★
Expanded		
24683BB	32 point remote display, DIN panel mount	

Hydratect Ordering Information

A Hydratect steam/water detection system comprises:-

- Control unit (see Table 7)
- Two electrodes, two electrode cables, two inserts, and two covers (see Table 8)
- Manifold (see Table 8 note), if user is not mounting electrodes in own manifold or pipework

Specification and selection of product materials, options, or components must be made by the purchaser of the equipment. See page 207 for more information on Material Selection.

Table 7. Hydratect ordering information

★The Standard offering represents the most common options. The starred options (★) should be selected for best delivery. The Expanded offering is subject to additional delivery lead time.

Model	Product Description	
2462	Hydratect Electronic Level Switch	
Power Supply And Input Boards		
Standard		**Standard**
A	2 point level switch, ac mains, single pole single throw relay outputs	★
E	2 point level switch, ac mains, two pole changeover relay outputs	★
Expanded		
C	2 point level switch, 24 Vdc, single pole single throw relay outputs	
Typical Model Number: 2462 A		

Table 8. Shrouded insert, cover, electrode, and cable ordering information

★The Standard offering represents the most common options. The starred options (★) should be selected for best delivery. The Expanded offering is subject to additional delivery lead time.

Model	Product Description	
Standard		**Standard**
24673540B	Series lll Insert, stainless steel (300 bar, 560 °C) (1) – one insert for each electrode	★
24673547B	Series III Insert PTFE Electrode (50 bar 260 °C) (1) – one insert for each electrode	★
24670118A	Series III cover – one cover for each electrode	★
246785Z(2)	Hydratect electrode – Series III, Zirconia insulator (see Table 9), 1 in. (25 mm) fitting – one electrode per port	★
246785A(2)	Hydratect electrode – Series III, ZTA insulator (see Table 9), 1 in. (25 mm) fitting – one electrode per port	★
246785P(2)	Hydratect electrode – Series III, PTFE insulator (see Table 9), 1 in. (25 mm) fitting – one electrode per port	★
24620204A	4-core electrode cable – 10 ft. (3 m) – one cable per electrode	★
24620205A	4-core electrode cable – 33 ft. (10 m) – one cable per electrode	★
24620206A	4-core electrode cable – 60 ft. (18 m) – one cable per electrode	★
24620207A	4-core electrode cable – 98 ft. (30 m) – one cable per electrode	★
Note: Manifolds (up to 4 ports) available for in-line/side-arm applications to special order – ask a local sales office for a manifold design sheet		

(1) Minimum pipe I/D for installation of insert is 1.65 in. (42 mm).

(2) See Table 9 for Hydratect electrode selection data. Do not mix electrode types.

Table 9. Hydratect electrode selection data

Part Number	Style	Material	Max Pressure PSI (Bar)	Max Temperature °F (°C)	ph Range
246785Z	Union Hydratect insert	Zirconia	3045 (210)	698 (370)	7 to 11
246785A	Union Hydratect insert	ZTA	4350 (300)	1040 (560)	7 to 11
246785P	Union Hydratect insert	PTFE	725 (50)	500 (260)	7 to 13.5

Specifications

Material selection

Emerson provides a variety of products with various product options and configurations including materials of construction that can be expected to perform well in a wide range of applications. The product information presented is intended as a guide for the purchaser to make an appropriate selection for the application. It is the purchaser's sole responsibility to make a careful analysis of all process parameters (such as all chemical components, temperature, pressure, flow rate, abrasives, contaminants, etc.), when specifying product, materials, options and components for the particular application. Emerson Process Management is not in a position to evaluate or guarantee the compatibility of the process fluid or other process parameters with the product, options, configuration or materials of construction selected.

Hydrastep specification

General		
Product	Hydrastep electronic steam/water gauging system	
Electrode Channels	8 to 32, in pairs. See Table 5 on page 205 for Hydrastep electrode specifications	
Water/Steam Threshold	0.6 µS/cm in clean water (up to 106 µS/cm); 1.6 µS/cm in dirty water (up to 300 µS/cm) Models for highly contaminated water, up to 1600 µS/cm, available to special order	
Display and fault indication		
Integral Display	Red/green bar graph, 32 LED segments. Display blanking from the bottom with less than 32 electrodes in use. Channel fault indication by flashing display segment. General fault indication by amber LED	
Remote Display	Indication same as Integral Display	
	Powered from main unit (1 display only). Local power 20 to 54 Vdc, 240 mA required for additional remote displays	
Electrical		
Power Supply	Power supply (ac): 94 to 130 V or 187 to 256 V, 48Hz to 65 Hz, 60 VA max. (1) Power supply (dc): 20 to 40V negative ground or isolated	
Analog Output	Signal is proportional to the water level Range: 0–20mA or 4–20mA, forward or reverse Accuracy: ± 0.2 mA Drive capability 600 ohms at nominal supply voltage, or 500 ohms at minimum supply voltage	
Relay Outputs (Optional)	Maximum of 4 can be fitted for alarm indication	
	Relay Board: Four independent change-over relays Relay contact rating (ac powered): Maximum voltage of 250 Vac Maximum current of 8A Maximum switching power: 1500VA Relay contact rating (dc powered): Maximum voltage of 125 Vdc Maximum current of 8A Maximum switching power: 40 W < 30 V, 65 W < 60 V, 25 W < 125 V Type N safety: 5A at 12Vdc, 100mA at 30Vdc, 20mA at 125Vdc	Delayed Relay Board (Specification as per Relay Board) Delay range: 0 to 25s ±1s Opto-coupled Board Solid state relays: Four independent outputs Rating: 30 Vdc, 1A Maximum voltage drop: 1.1 V @ 1A Maximum leakage current: 1 mA @ 30 Vdc
Remote Display Output	Drive to remote displays (maximum 6 units). 3280 ft. (1000 m) maximum distance	
Opto-isolated Fault Output	Detects fault in electrode connection (open circuit and short-circuit to ground)	
Environment		
Operating Temperature	–4 to 158 °F (–20 to 70 °C)	
Operating Pressure	See Table 3 on page 205 for the Hydrastep water column specifications	
Relative Humidity	Up to 100%	

Mechanical	
Weight	26.4 lb (12 kg)
Control Unit Enclosure	Brushed stainless steel, wall mounting (four point), IP65 / NEMA4X 16.7 in. high x 12.8 in. wide x 6.4 in. deep (425 mm x 325 mm x 163 mm)
Remote Display Unit Enclosure	2468 3BB (Case style: DIN Panel Mount) Dimensions: 5.67 in. x 2.38 in. x 7.87 in. deep (144 mm x 72 mm x 200mm) Panel cutout: 5.41 in. x 2.60 in. (137.5mm x 66mm) 2468 3C (Case style: Large Panel Mount) Dimensions: 7.56 in. x 3.78 in. x 8.23 in. deep (192mm x 96mm x 209mm) Panel cutout: 7.32 in. x 3.62 in. (186mm x 92mm) 2468 3D (Case style: Rugged enclosure, NEMA 4X (IP65)) Dimensions: 11.89 in. x 7.32 in. x 6.89 in. deep (302mm x 186mm x 175mm)
Hydrastep approvals	
LVD	EN 61010-1
ATEX	II3 G EEx nA IIC, T4 (–20 °C < ta < +70 °C)
CSA	(Canada) Ex nA [nL] nL IIC T4, (USA) Class 1 Zone 2, AEx nA IIC with relay output connected only to energy limited circuits
Electromagnetic Compatibility	EN 61326-1:2006
Pressure Equipment Directive	Safety accessory

(1) Dual power supply version of Hydrastep Control Unit – Table 1 on page 203 for option codes.

Hydratect specification

General	
Product	Hydratect steam/water detection system
Electrode Channels	2 (See Table 9 on page 206 for Hydratect electrode specifications)
Water/Steam Threshold	0,6 µS/cm (normal) or 1,6 µS/cm (alternate) depending on water purity
Display	
Integral Display	One Red LED for indication of steam One Green LED for indication of water One Amber LED for indication of fault
Electrical	
Power Supply	Power supply (ac): 94 to 130 V or 187 to 256 V, 48 Hz to 65 Hz, 2 x 10 VA maximum Power supply (dc): 20 to 60 V, 2 x 200 mA maximum, +ve or –ve ground
Status Relay Output (One Per Channel)	Water normal: Energized in water Steam normal: Energized in steam Separate normally open and normally closed contacts: • Maximum voltage: 250 Vac, 125 Vdc • Maximum current: 8 A • Maximum Switching Power (ac): 1500 VA • Maximum Switching Power (dc): 240 W < 30 V, 65 W < 60 V, 25 W < 125 V
Opto-isolated Fault Output	Detects fault in electrode connection (open circuit and short-circuit to ground) Output rating “off”: 30 Vdc max, leakage <1 mA Output rating “on”: 1 A dc, voltage <1.1 V @ 1 A
Fault Relay Output (One Per Channel)	Energized during normal operation (fail-safe). Specification as status relay output above
Mechanical	
Enclosure	Stainless steel, grade 304, wall mounting (two point) Finish - natural IP65 / NEMA4X 7.5 in. x 7.5 in. x 3.5 in. (190 mm x 190 mm x 90 mm)
Weight	6.2 lb (2.8 kg)

Environment	
Operating Temperature	–4 to 158 °F (–20 to 70 °C)
Operating Pressure	Manifolds are available with 1 to 4 electrode ports. Various materials depending on required pressure and temperature rating. Design sheets are available on request.
	A selection of electrode types are available for pressures up to 4350 psi (300 bar) at 1040 °F (560 °C): • The low pressure type, up to 1740 psi (120 bar) has a threaded style fitting (metaflex gasket seal). Choice of PTFE or ceramic insulator • The high pressure type, up to 4350 psi (300 bar), uses a union fitting (metal-to-metal seal). Choice of insulators
Relative Humidity	Up to 100%

Dimensional Drawings

Hydrastep enclosure

Note: Dimensions are in inches (mm).

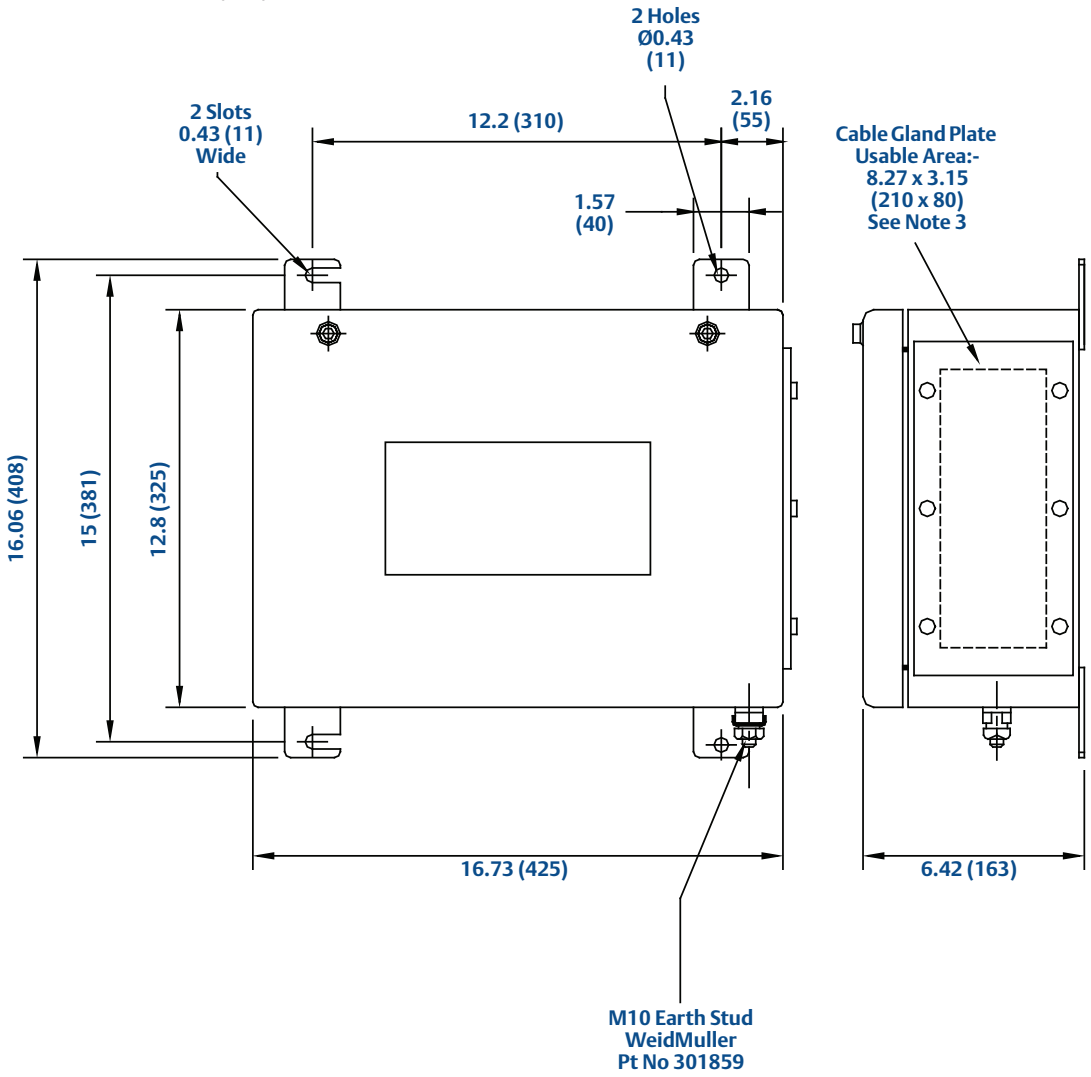

NOTES:

1. Weight: 12 kg
2. IP Rating: IP65 / NEMA4X
3. Material Thickness Between Cable Gland Holes Must Be 9 mm Minimum.
4. Enclosure: Brushed Stainless Steel

Hydratect enclosure

Note: Dimensions are in mm.

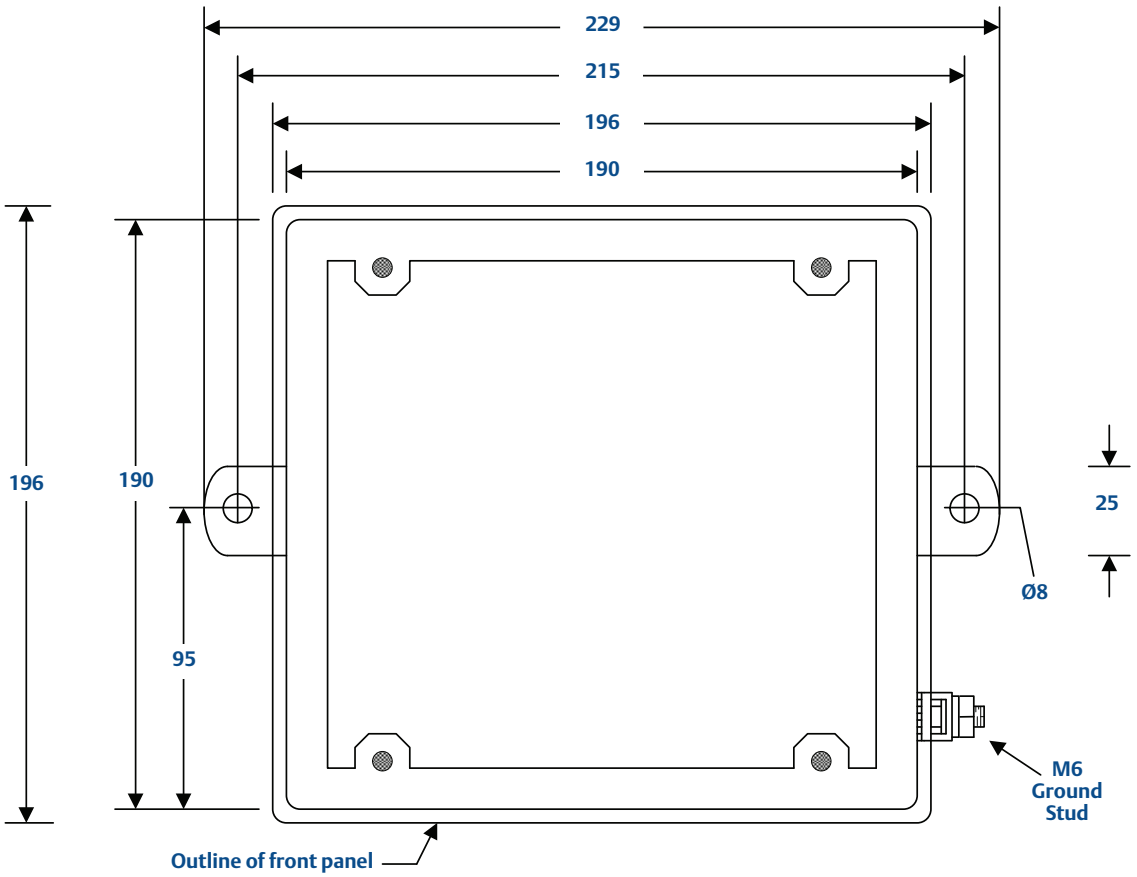

Overall depth = 100 mm (case and panel) + 3 mm (bracket) + 4.5 mm (bolt heads and washers)

The Emerson logo is a trademark and service mark of Emerson Electric Co.
Mobrey is a registered trademark of Rosemount Measurement Ltd.
Rosemount is a registered trademark of Rosemount Inc.
All other marks are the property of their respective owners.
Standard Terms and Conditions of Sale can be found at www.rosemount.com\terms_of_sale

© 2015 Rosemount Measurement Ltd. All rights reserved.

Emerson Process Management
Rosemount Measurement Ltd.
158 Edinbugh Avenue,
Slough, Berks., SL1 4UE, UK
Tel +44 (0)1753 756600
Fax +44 (0)1753 823589
www.emersonprocess.com

Emerson Process Management
Rosemount Inc.
8200 Market Boulevard
Chanhassen, MN 55317, USA
T (USA) 1 800 999 9307
T (International) +1 952 906 8888
F +1 952 906 8889

mobrey

EMERSON™
Process Management